150cc Scorch Parts List

Last Revision 4/18/17

In 2016, Bintelli moved its overseas manufacturing from the ZNEN factory (VIN Number begins with "L5Y") to the JIAJUE factory (VIN Number begins with "LLP"). On this parts diagram, different part numbers are listed for each manufacturing facility. When ordering parts for this model of scooter, please be sure to check your vin number to be sure your order the correct part number for your scooter. If you have any questions, please do not hesitate to contact us.

Bintelli Scooters
620 Dobbin Road
Charleston, SC 29414
(843) 531-6833 Phone
(843) 556-4080 Fax

Scorch 150cc (F35 150) #1

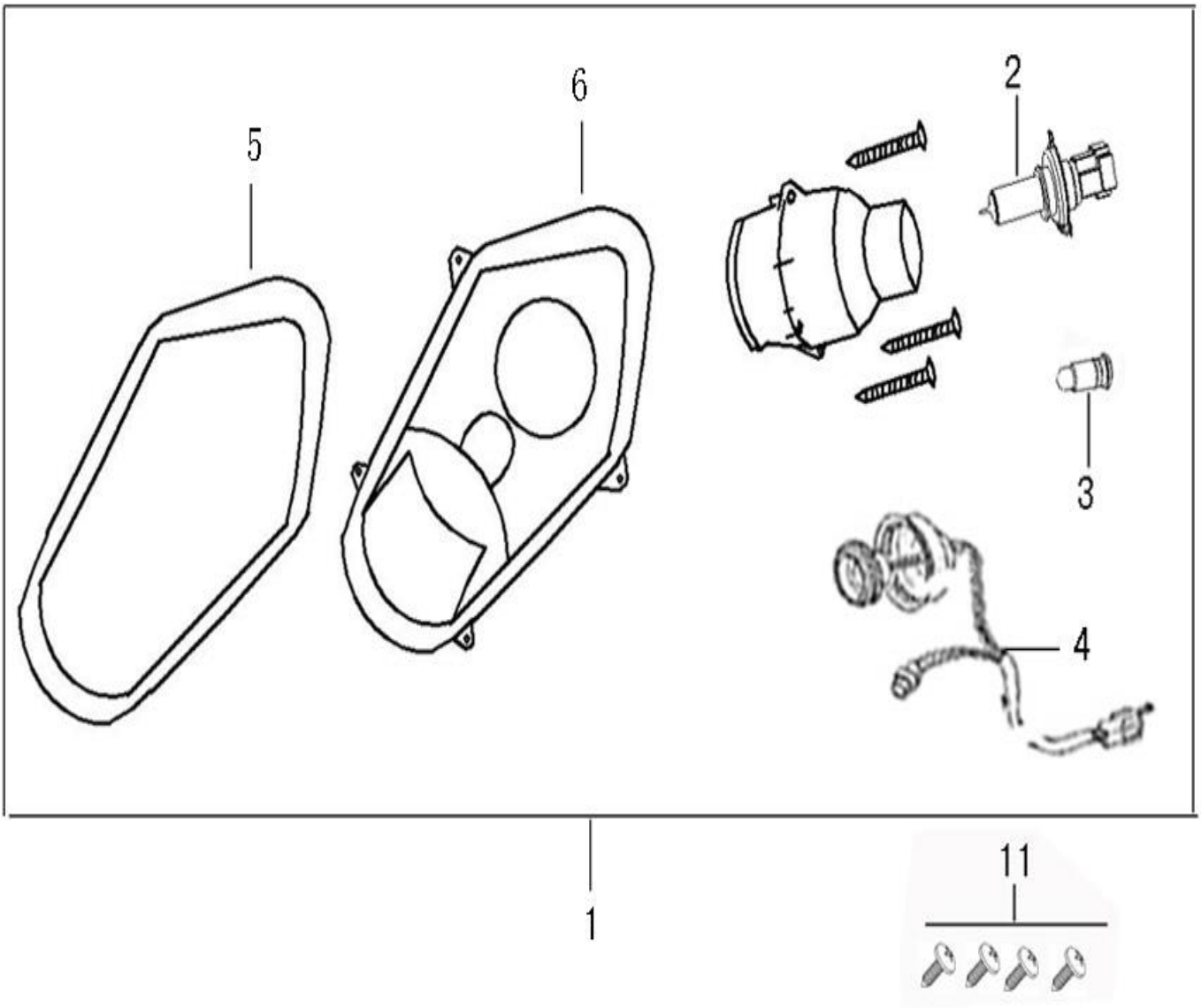

Diagram Number	Part Number (ZNEN, Vin starts with L5Y)	Part Number (JIAJUE, Vin starts with LLP)	Description
1	33100-F35-9000	33100-F35-9000-J	LIGHT ASSY HEAD
2	34901-F35-9000	34901-F35-9000-J	BULB HEAD LIGHT 12V35W/35W
3	34903-F35-9000	34903-F35-9000-J	SIDELIGHTS BULB 12V 5W
4	33130-F35-9000	33130-F35-9000-J	SOCKET COMP
5	must buy assembly		SHELL HEAD LIGHT
6	must buy assembly		BASE HEAD LIGHT
11	93401-42012-03	93401-42012-03-J	SCREW TAPPING 4.2*12（G）

Scorch 150cc (F35 150) #2

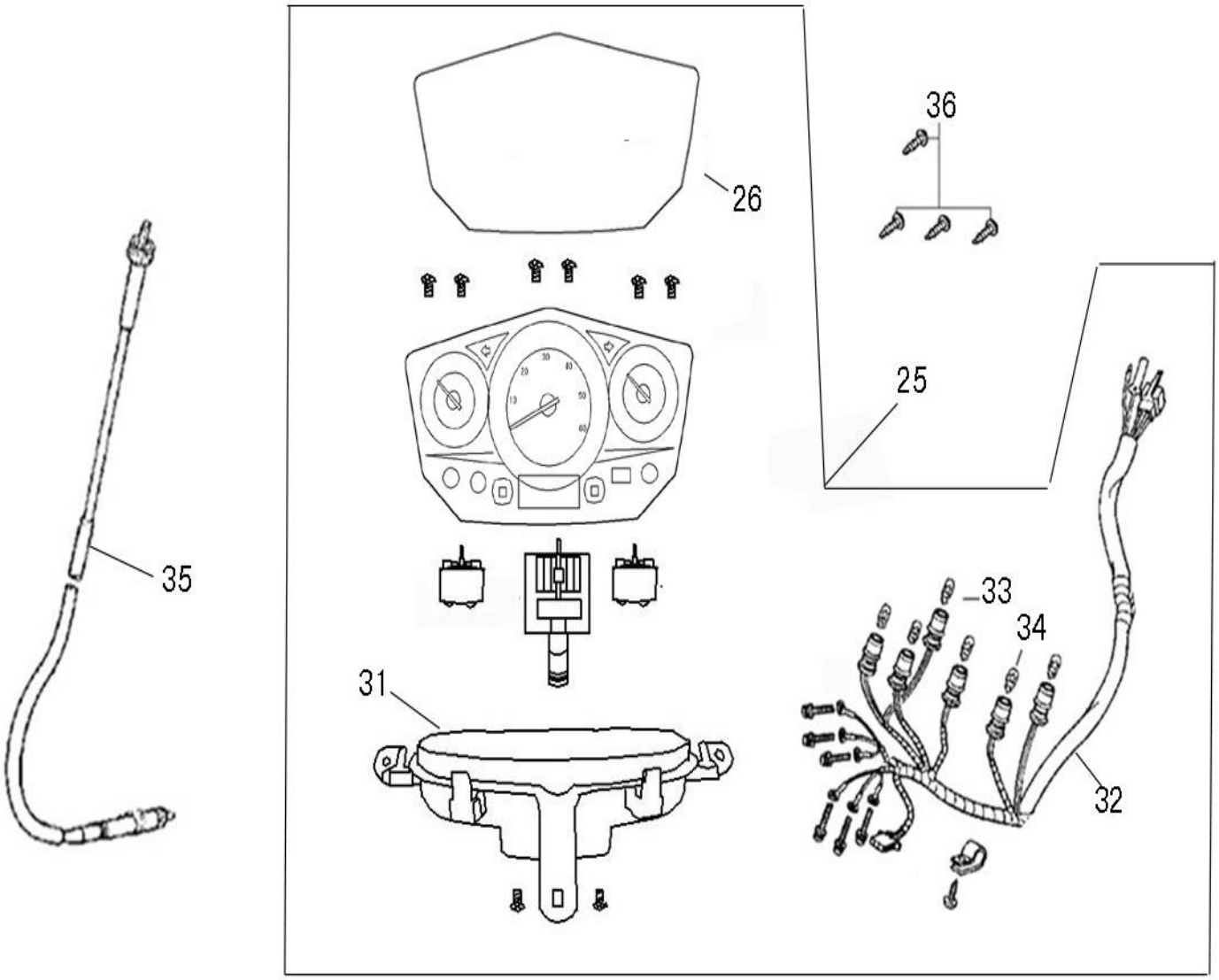

Diagram Number	Part Number (ZNEN, Vin starts with L5Y)	Part Number (JIAJUE, Vin starts with LLP)	Description
25	37200-F35-E000	37200-F35-E000-J	SPEED METER ASSY
26	must buy assembly		LENS
31	must buy assembly		CASE ASSY
32	37224-F35-9000	37224-F35-9000-J	SOCKET COMP METER
33	34908-F8-9000	34908-F8-9000-J	BULB WEDGE BASE(12V3.4W)
34	must buy assembly		BULB WEDGE BASE(12V1.7W)
35	37201-F35-E000	37201-F35-E000-J	CABLE COMP SPDMT
36	93401-42012-03	93401-42012-03-J	SCREW TAPPING4.2*12(G)

Scorch 150cc (F35 150) #3

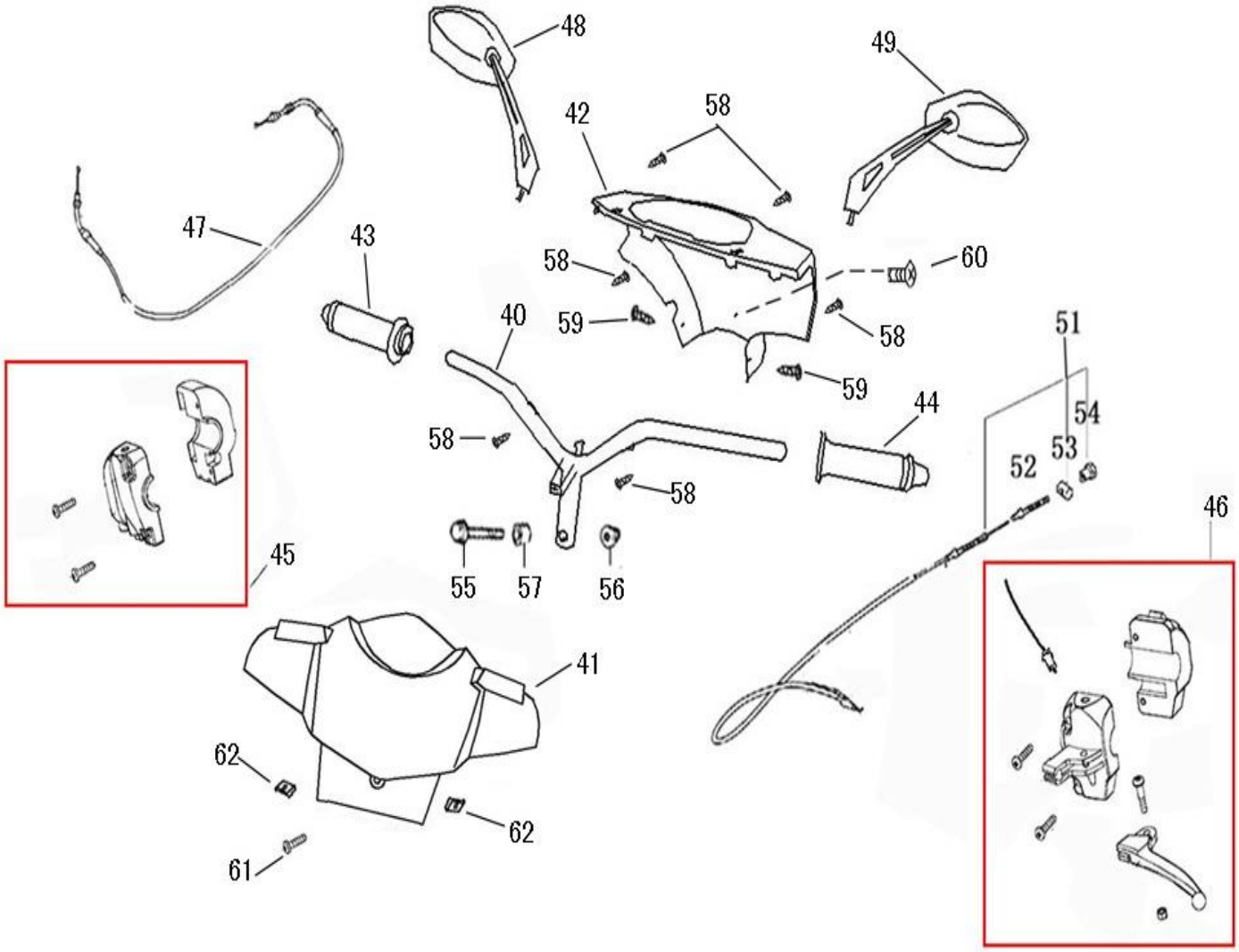

Diagram Number	Part Number (ZNEN, Vin starts with L5Y)	Part Number (JIAJUE, Vin starts with LLP)	Description
40	53100-F35-9000	53100-F35-9000-J	HANDLE COMP STRG
41	53206-F35-9000	53206-F35-9000-J	COVER HANDLE FR
42	53205-F35-9000	53205-F35-9000-J	COVER METER
43	53140-B08-9000	53140-B08-9000-J	GRIP COMP THROT
44	53166-B08-9000	53166-B08-9000-J	GRIP L HANDLE
45	3515A-B08-9000	3515A-B08-9000-J	SW ASSY RH HNDL
46	3520A-B08-9000	3520A-B08-9000-J	SW ASSY LH HNDL
47	17910-B08-9000	17910-B08-9000-J	CABLE COMP THROT
48,49	88120/88110-B08-E000	88120/88110-B08-E000-J	MIRROR ASSY SET

Scorch 150cc (F35 150) #3 Cont'd

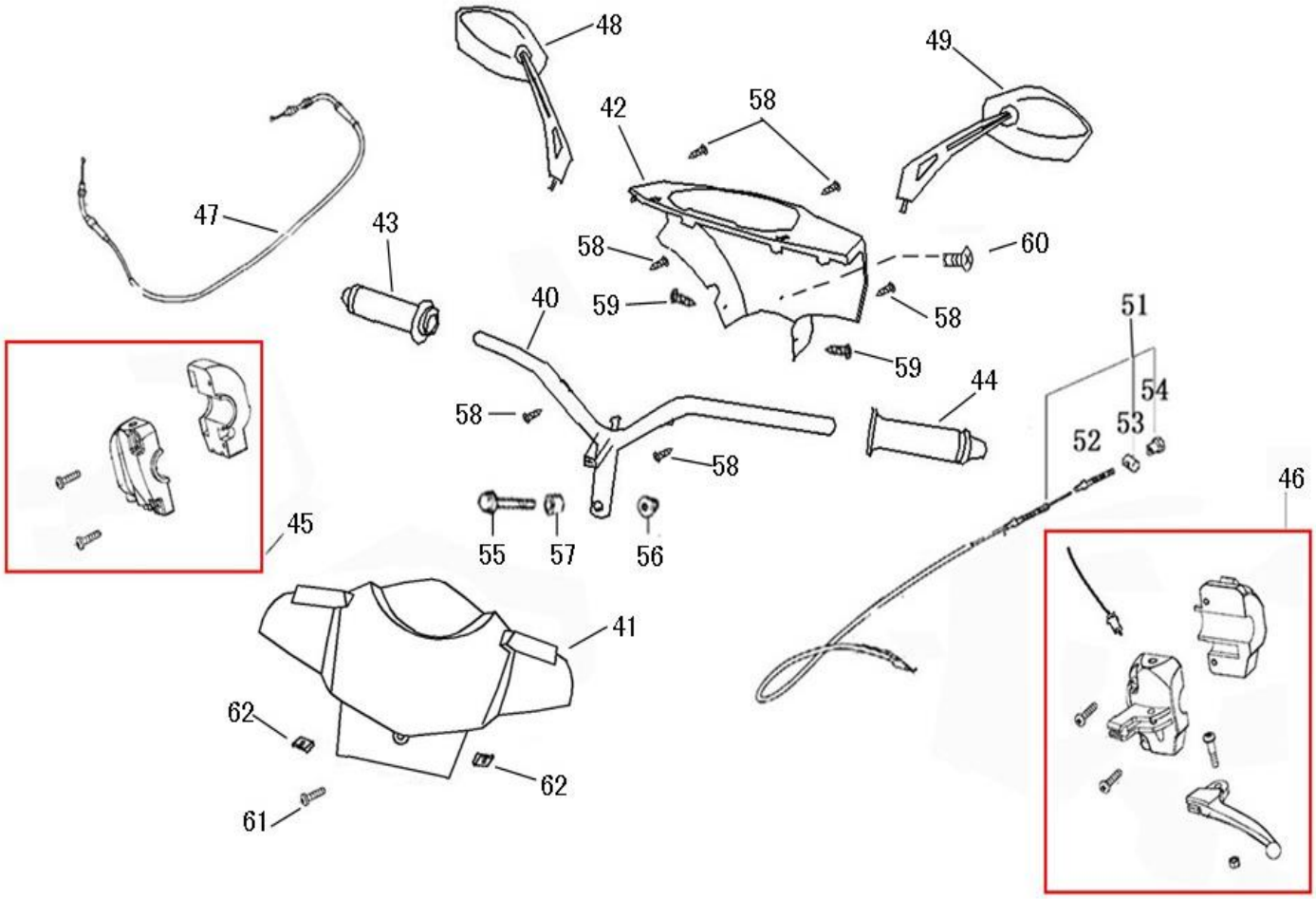

Diagram Number	Part Number (ZNEN, Vin starts with L5Y)	Part Number (JIAJUE, Vin starts with LLP)	Description
51	43450-B08-9000	43450-B08-9000-J	CABLE COMP RR BRK
52	must buy assembly		SPG RR BRK ARM
53	must buy assembly		JOINT B BRAKE ARM
54	must buy assembly		NUT B ADJUST
55	92201-10050-03	92201-10050-03-J	BOLT FLANGE 10*50
56	95401-10000-03	95401-10000-03-J	NUT U 10MM（G）
57	53125-F8-9000	53125-F8-9000-J	COLLAR HANDLE SET
58	93401-42012-03	93401-42012-03-J	SCREW TAPPING 4.2*12（G）
59	93401-48016-03	93401-48016-03-J	SCREW TAPPING 4.8*16（G）
60	92701-06016-02	92701-06016-02-J	SCREW SPECIAL 6*16
61	93201-05030-02	93201-05030-02-J	SCREW PAN 5*30
62	90601-F8-9000	90601-F8-9000-J	NUT SPRING 4MM

Scorch 150cc (F35 150) #4

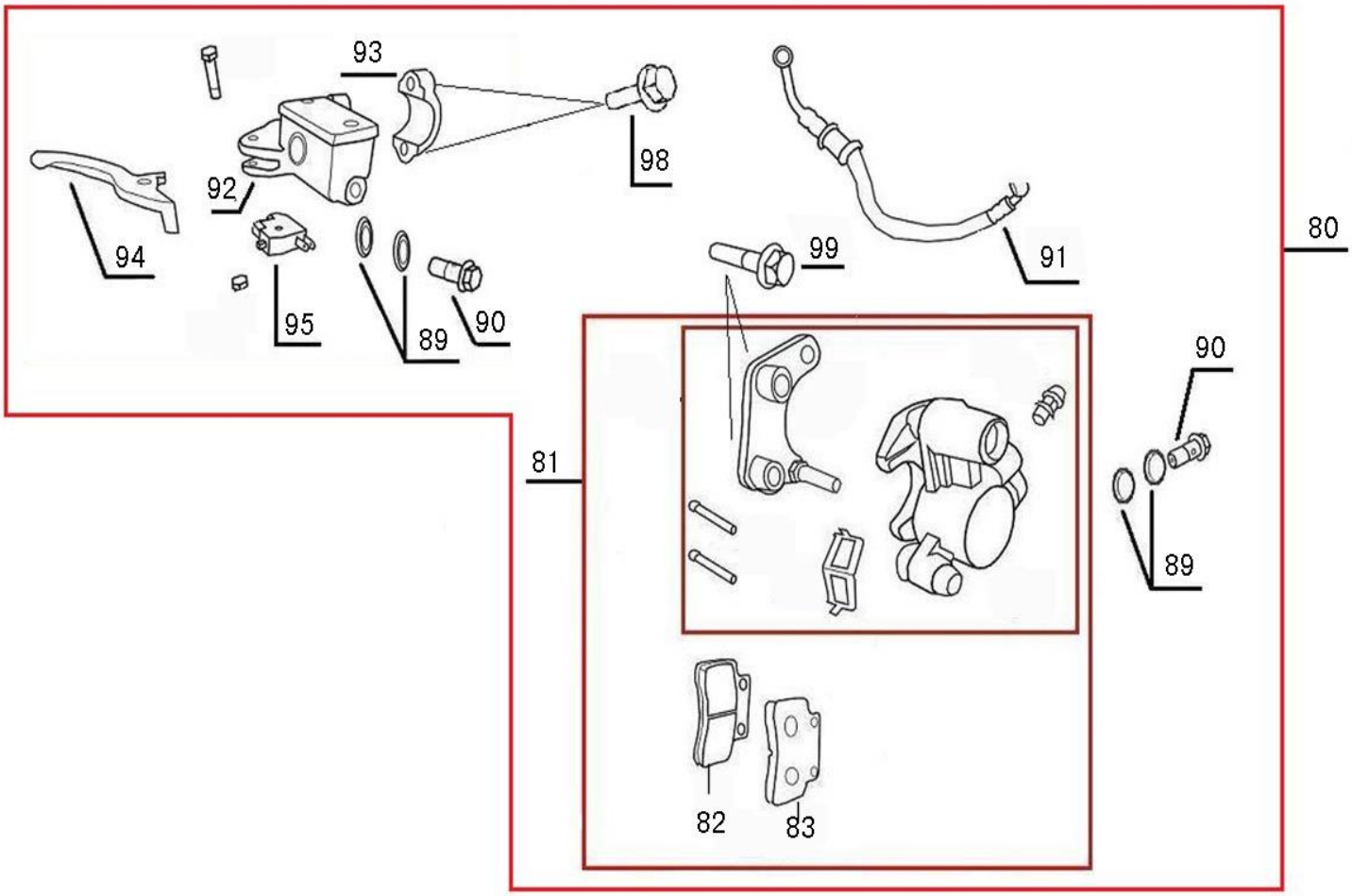

Diagram Number	Part Number (ZNEN, Vin starts with L5Y)	Part Number (JIAJUE, Vin starts with LLP)	Description
80	4550A-F35-E000	4550A-F35-E000-J	SUB HARNESS SET FR M/C COMP
81	45200-B08-E000	45200-B08-E000-J	CALIPER ASSY FR
82	45105-B08-E000	45105-B08-E000-J	PAD COMP A
83	45106-B08-E000	45106-B08-E000-J	PAD COMP B
89	must buy assembly		WASHER OIL BOLT
90	must buy assembly		OIL BOLT 10*22
91	45126-B08-9000	45126-B08-9000-J	HOSE ASSY FR BRK
92	45500-LF-9000	45500-LF-9000-J	SUB HARNESS SET FR M/C
93	must buy assembly		Block installation
94	53175-LF-9000	53175-LF-9000-J	HANDLE
95	10099-LF-9000	10099-LF-9000-J	SHUT-OFF BLOCK CONSTITUTE
98	92101-06025-03	92101-06025-03-J	BOLT FLANGE 6*25 （G）
99	92901-08035-03	92901-08035-03-J	BOLT FLANGE 8*35

Scorch 150cc (F35 150) #5

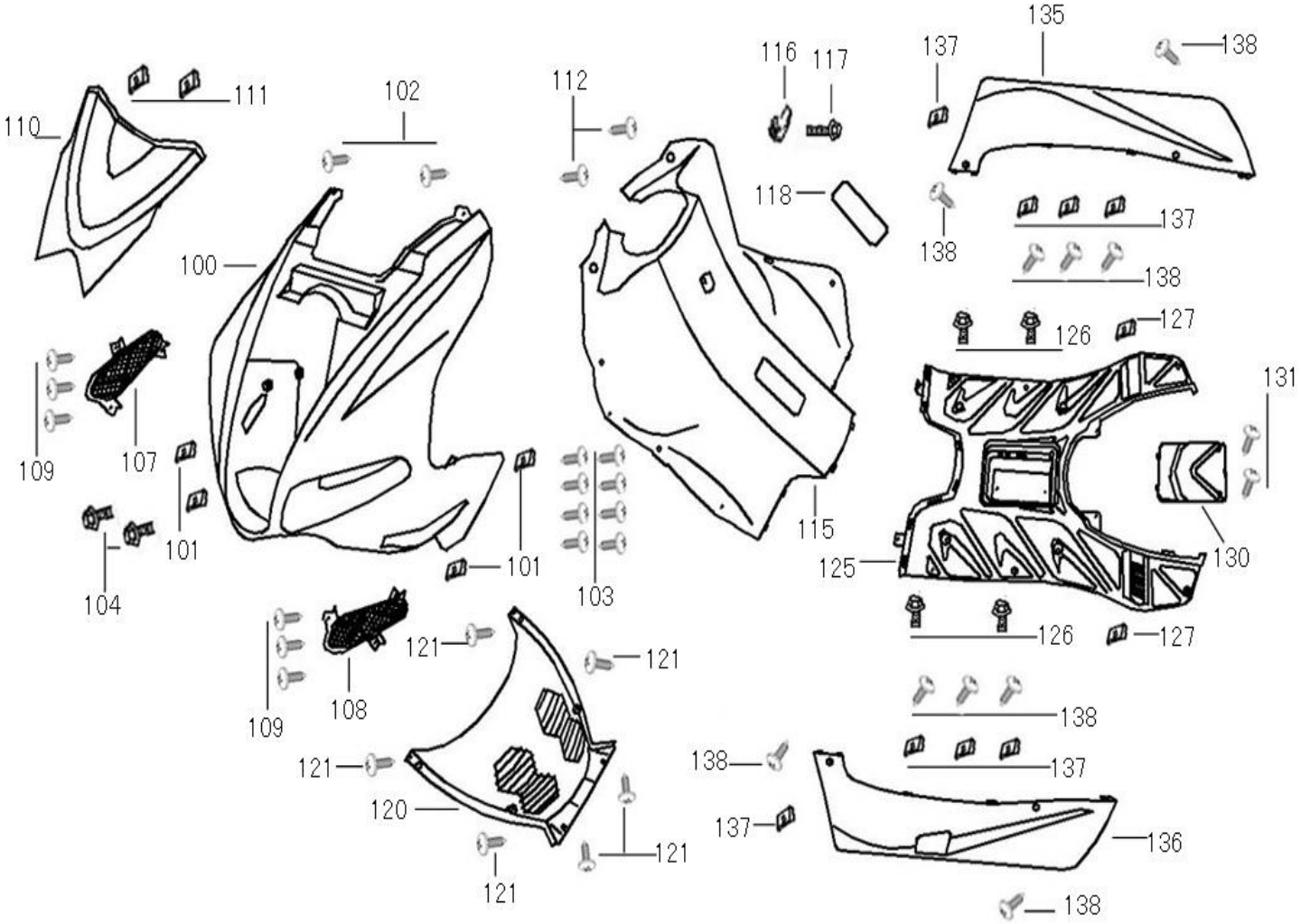

Diagram Number	Part Number (ZNEN, Vin starts with L5Y)	Part Number (JIAJUE, Vin starts with LLP)	Description
100	64301-F35-9000	64301-F35-9000-J	COVER FR
101	90601-F8-9000	90601-F8-9000-J	NUT SPRING 4MM
102	93401-42012-03	93401-42012-03-J	SCREW TAPPING 4.2*12（G）
103	93401-42012-03	93401-42012-03-J	SCREW TAPPING 4.2*12（G）
104	92101-06016-03	92101-06016-03-J	BOLT FLANGER 6*16(G)
107	64315-F35-9000	64315-F35-9000-J	VENTILATION GRID R
108	64316-F35-9000	64316-F35-9000-J	VENTILATION GRID L
109	93401-42012-03	93401-42012-03-J	SCREW TAPPING 4.2*12（G）
110	64303-F35-9000	64303-F35-9000-J	LID , FR. COVER
111	90601-F8-9000	90601-F8-9000-J	NUT SPRING 4MM
112	93401-48016-03	93401-48016-03-J	SCREW TAPPING 4.8*16（G）
115	64304-F35-9000	64304-F35-9000-J	LEG SHIELD

Scorch 150cc (F35 150) #5 Cont'd

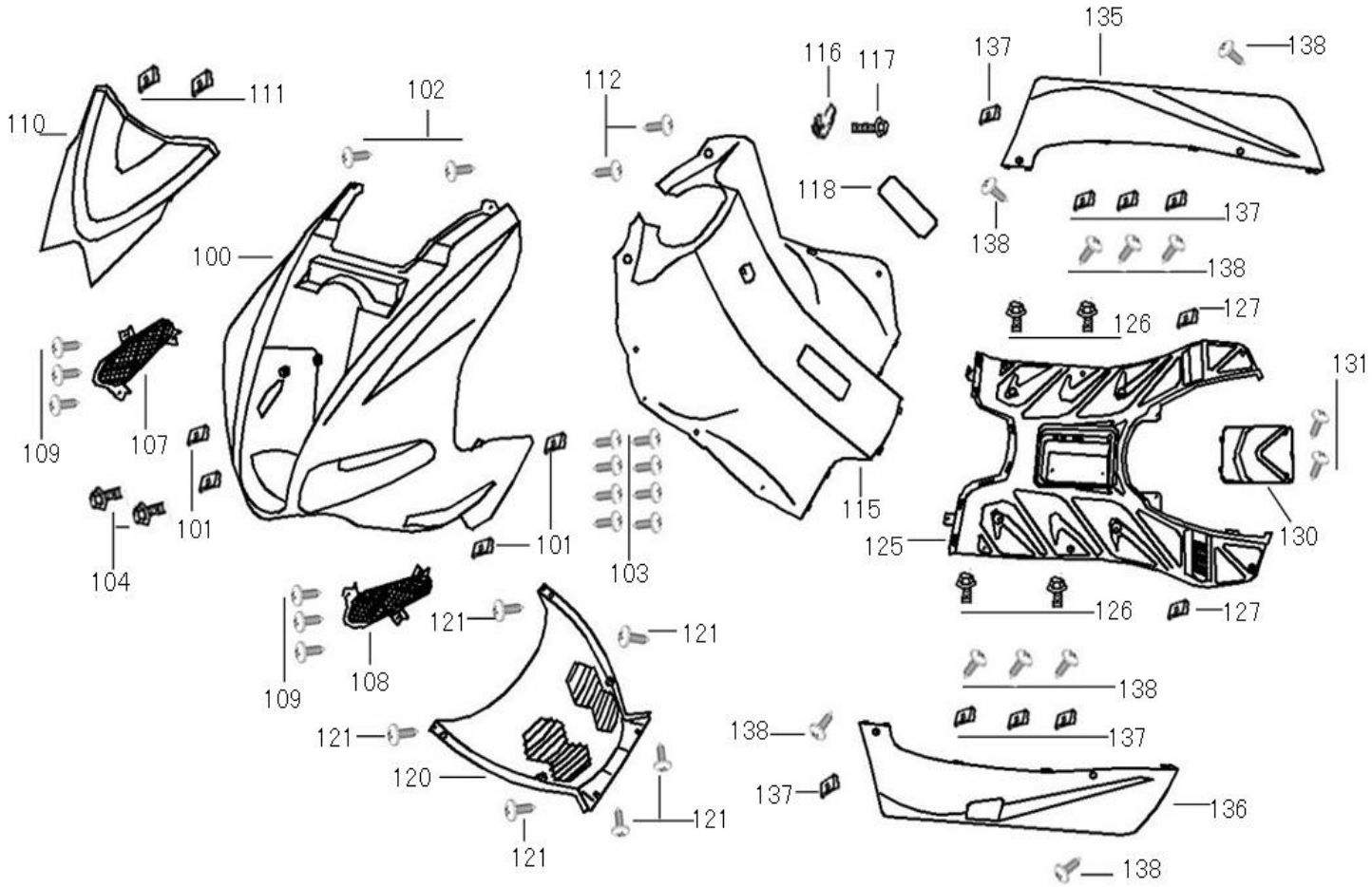

Diagram Number	Part Number (ZNEN, Vin starts with L5Y)	Part Number (JIAJUE, Vin starts with LLP)	Description
116	83760-F22-9000	83760-F22-9000-J	CLIP ASSY CENTER
117	92101-06030-03	92101-06030-03-J	BOLT FLANGER 6*30(G)
118	81142-F22-9000	81142-F22-9000-J	LID LEG SHIELD
120	61113-F35-9000	61113-F35-9000-J	FRAME FENDER FR
121	93401-48016-03	93401-48016-03-J	SCREW TAPPING 4.8*16（G）
125	64310-F35-9000	64310-F35-9000-J	FLOOR PANEL
126	93001-06017-03	93001-06017-03-J	BOLT FLANGE 6*17(G)
127	90601-F8-9000	90601-F8-9000-J	NUT SPRING 4MM
130	50326-F35-9000	50326-F35-9000-J	COVER BATTERY
131	93401-42016-03	93401-42016-03-J	SCREW TAPPING 4.2*16（G）
135	64305-F35-9000	64305-F35-9000-J	SKIRT R SIDE
136	64306-F35-9000	64306-F35-9000-J	SKIRT L SIDE
137	90601-F8-9000	90601-F8-9000-J	NUT SPRING 4MM
138	93401-48016-03	93401-48016-03-J	SCREW TAPPING 4.8*16（G）

Scorch 150cc (F35 150) #6

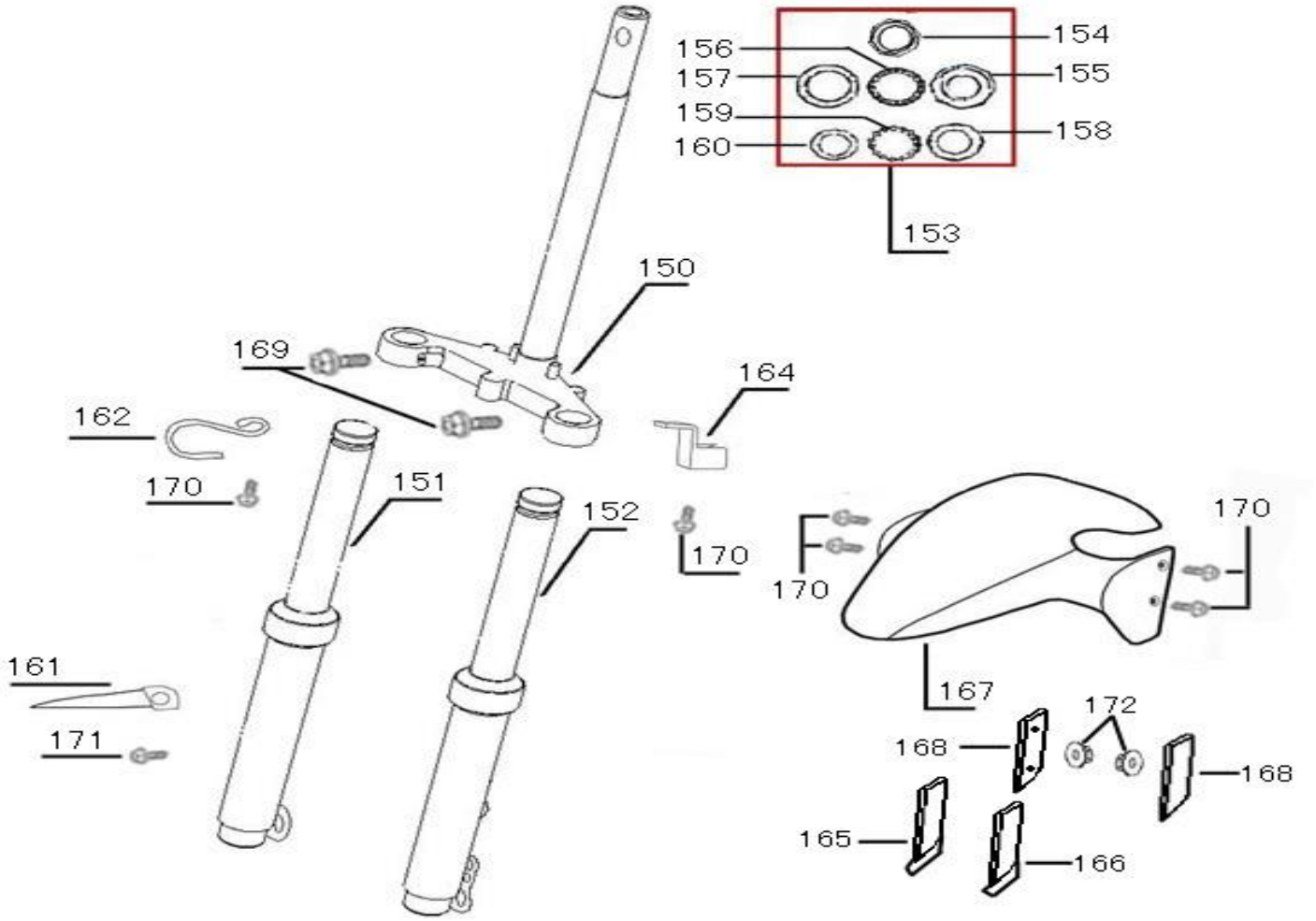

Diagram Number	Part Number (ZNEN, Vin starts with L5Y)	Part Number (JIAJUE, Vin starts with LLP)	Description
150	53200-F22-9000	53200-F22-9000-J	STEM COMP STRG
151	51400-B08-9200-HU01	51400-B08-9200-HU01J	CUSHION ASSY FR R
152	51500-B08-9200-HU01	51500-B08-9200-HU01J	CUSHION ASSY FR L
153	50300-F22-9000	50300-F22-9000-J	RACE STRG COMP
154	50306-F8-9000	50306-F8-9000-J	NUT STRG STEM LOCK
155	53211-F8-9000	53211-F8-9000-J	RACE STRG TOP CONE
156	53213-F8-9000	53213-F8-9000-J	BALL STEEL
157	50301-F8-9000	50301-F8-9000-J	RACE UP STRG BALL
158	50302-B08-9000	50302-B08-9000-J	RACE (STRG BOT) BALL
159	53214-B08-9000	53214-B08-9000-J	BALL STEEL
160	53212-B08-9000	53212-B08-9000-J	RACE (STRG BOTTOM) CONE
161	45156-B08-9000-A/B	45156-B08-9000-A/B-J	CLAMPER FR BRK CABLE

Scorch 150cc (F35 150) #6 Cont'd

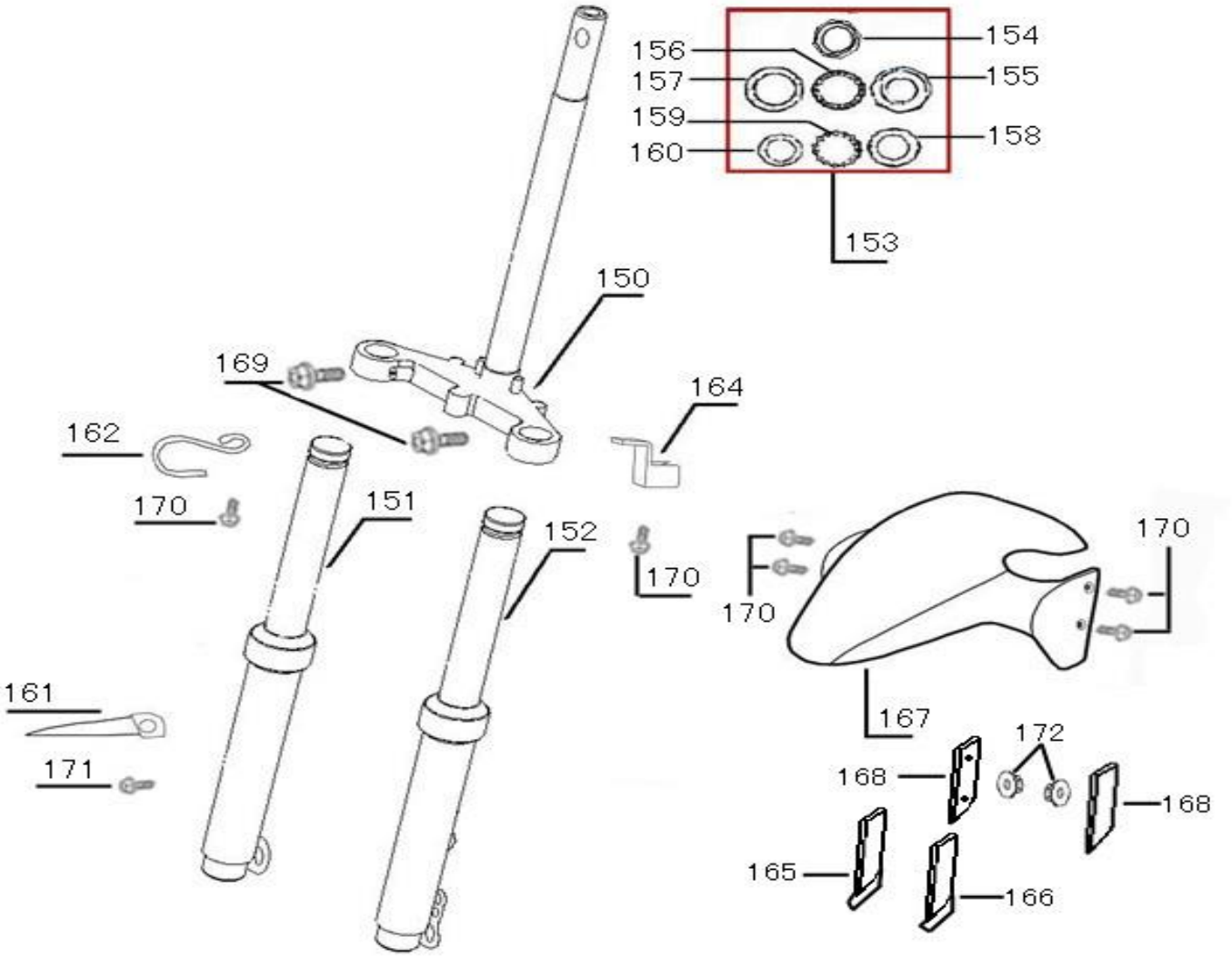

Diagram Number	Part Number (ZNEN, Vin starts with L5Y)	Part Number (JIAJUE, Vin starts with LLP)	Description
162	45157-F22-9000	45157-F22-9000-J	CLAMPER FR BRK CABLE
163	45128-F22-9000	45128-F22-9000-J	CLAMPER C FR BRAKE HOSE
164	45127-F22-9000	45127-F22-9000-J	CLAMPER C FR BRAKE HOSE
165	33744-F35-9000	33744-F35-9000-J	REFLEX REFLECTOR STAY R
166	33745-F35-9000	33745-F35-9000-J	REFLEX REFLECTOR STAY L
167	61100-F35-9000	61100-F35-9000-J	ASSY FR INNER FENDER
168	33741-B08-E000	33741-B08-E000-J	REFLEX REFLECTOR
169	92101-10030-09	92101-10030-09-J	BOLT FLANGER 10*30
170	92101-06012-09	92101-06012-09-J	BOLT FLANGER 6*12
171	92101-06016-09	92101-06016-09-J	BOLT FLANGER 6*16
172	95101-06000-08	95101-06000-08-J	NUT FLANGE 6MM （G）

Scorch 150cc (F35 150) #7

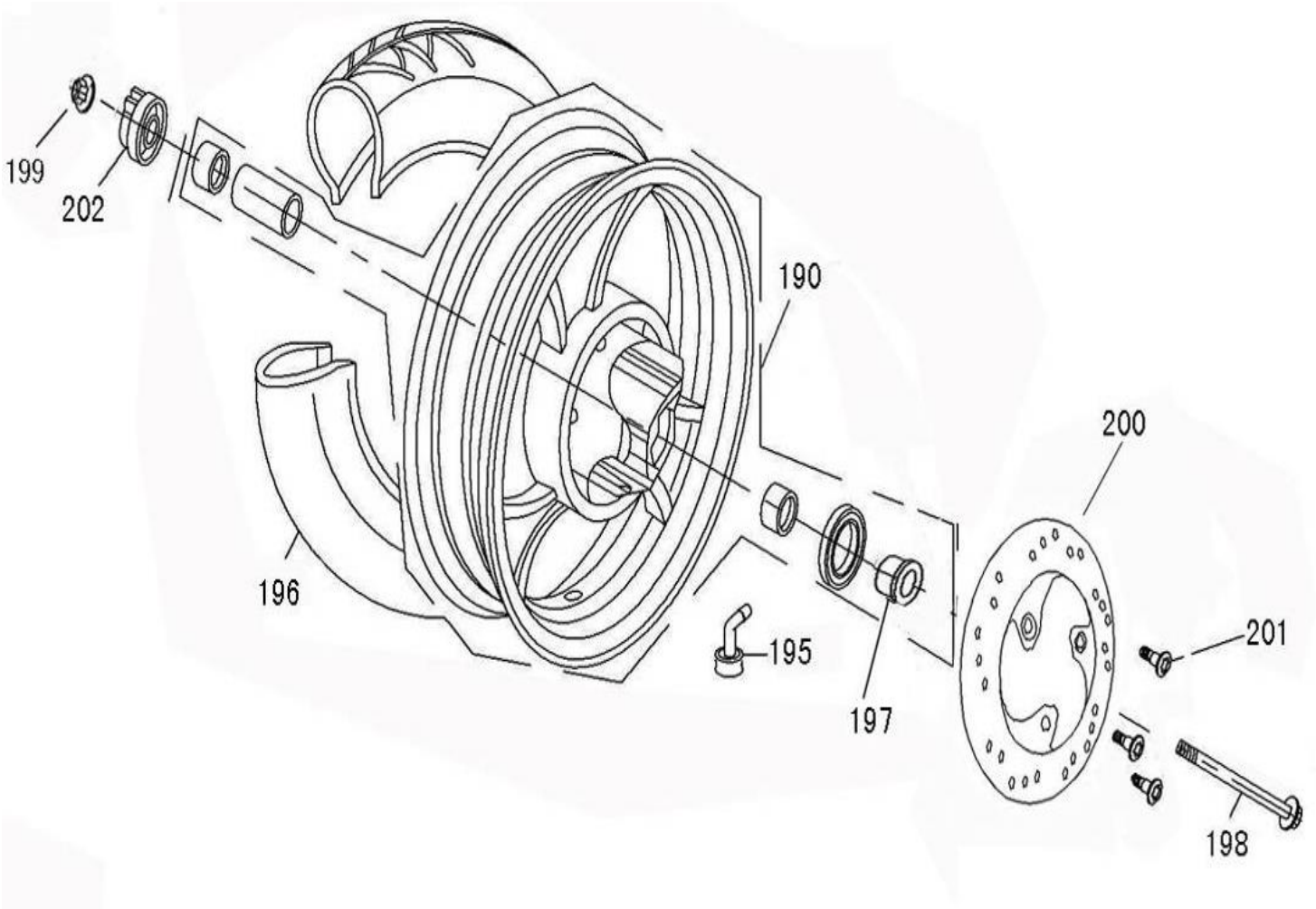

Diagram Number	Part Number (ZNEN, Vin starts with L5Y)	Part Number (JIAJUE, Vin starts with LLP)	Description
190	44600-B08-9000	44600-B08-9000-J	WHEEL SET FR
Not Shown	44601-B08-9000	44601-B08-9000-J	WHEEL FR CAST
Not Shown	90754-F8-0000	90754-F8-0000-J	DUST SEAL
Not Shown	44620-B08-9000	44620-B08-9000-J	COLLAR FR DIST
Not Shown	90912-F8-9000	90912-F8-9000-J	BEARING 6201 LLU
195	42753-F8-9000-A/B/C/D	42753-F8-9000-A/B/C/D-J	VALVE(PVR-70)&CAP(E)
196	44710-F8-9000-A/B/C/D	44710-F8-9000-A/B/C/D-J	TIRE ASSY(120/70-12)
197	44311-B08-9000	44311-B08-9000-J	COLLAR FR WHEEL SIDE
198	44301-B08-9000	44301-B08-9000-J	AXLE FR WHEEL
199	95501-12000-03	95501-12000-03-J	NUT U FLANGE 12MM（G）
200	45121-B08-E000-B	45121-B08-E000-B-J	DISK FR BRAKE
201	93601-08025-02	93601-08025-02-J	BOLR DISK
202	44800-B08-9000	44800-B08-9000-J	GEAR BOX ASSY

Scorch 150cc (F35 150) #8

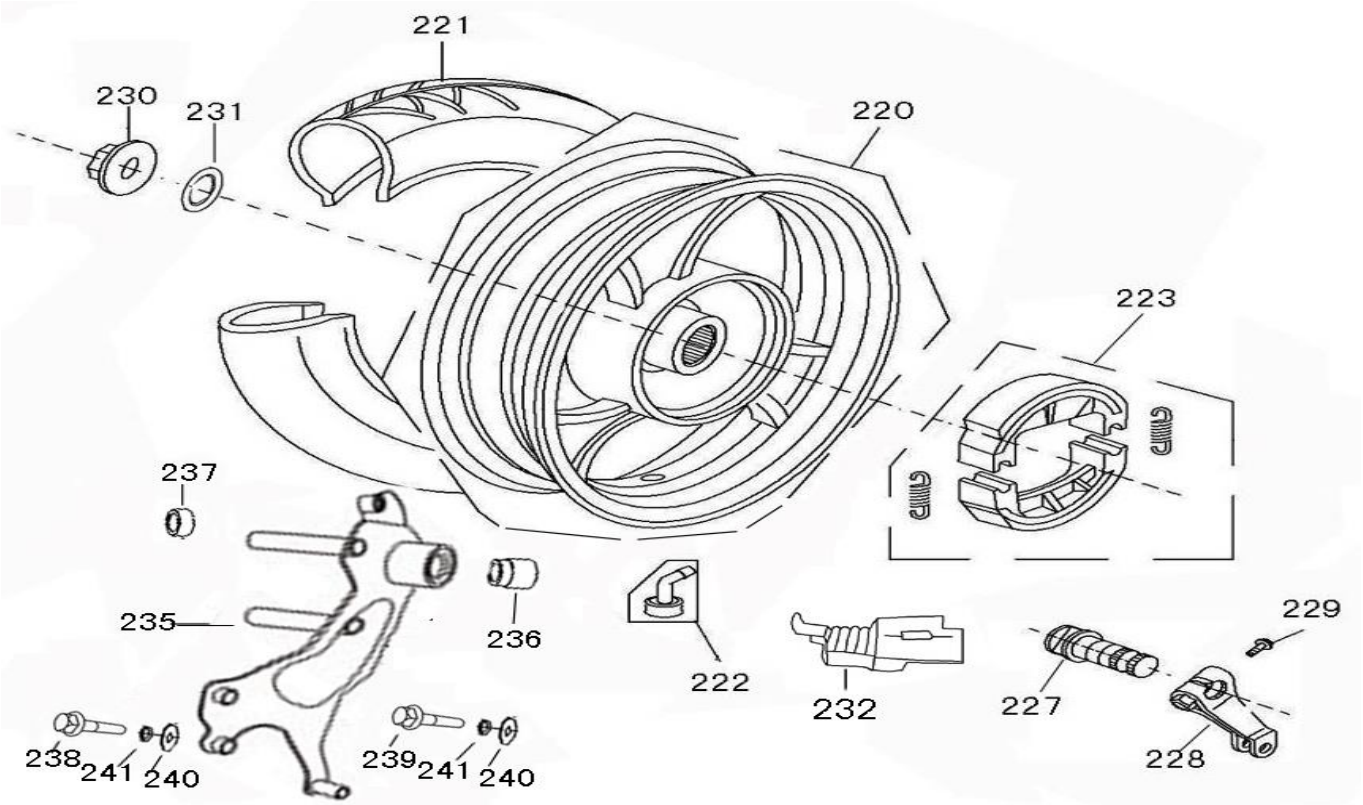

Diagram Number	Part Number (ZNEN, Vin starts with L5Y)	Part Number (JIAJUE, Vin starts with LLP)	Description
220	42600-B08-9000	42600-B08-9000-J	WHEEL COMP RR CAST
221	44710-F8-9000-A/B/C/D	44710-F8-9000-A/B/C/D-J	TIRE ASSY(120/70-12)
222	42753-F8-9000-A/B/C/D	42753-F8-9000-A/B/C/D-J	VALVE(PVR-70)&CAP(E)
223	4312A-B08-E000	4312A-B08-E000-J	SHOE SET BRAKE
Not Shown	43120-B08-E000	43120-B08-E000-J	SHOE COMP RR BRK
Not Shown	45133-DGW-9000	45133-DGW-9000-J	SPRING BRAKE SHOE
227	43141-DGW-9000	43141-DGW-9000-J	CAM RR BRK
228	43410-DGW-9000	43410-DGW-9000-J	ARM COMP RR BRAKE
229	92101-06032-03	92101-06032-03-J	BOLT FLANGER6*32
230	95502-16000-03	95502-16000-03-J	NUT U 16MM（G）
231	95901-16000-03	95901-16000-03-J	SPG CANSHER 16MM
232	43143-DGW-9000	43143-DGW-9000-J	PREVENT DUST COVER
235	43210-B08-9000	43210-B08-9000-J	MUFFLER ASSY STAY
236	42313-B08-9000	42313-B08-9000-J	COLLAR REAR HUB SIDE
237	42312-B08-9000	42312-B08-9000-J	COLLAR REAR HUB SIDE
238	92201-08040-03	92201-08040-03-J	BOLT WASHER 8*40
239	92201-08050-03	92201-08050-03-J	BOLT WASHER 8*50
240	95801-08000-03	95801-08000-03-J	WASHER 8MM
241	95901-08000-03	95901-08000-03-J	SPG WASHER 8MM

Scorch 150cc (F35 150) #9

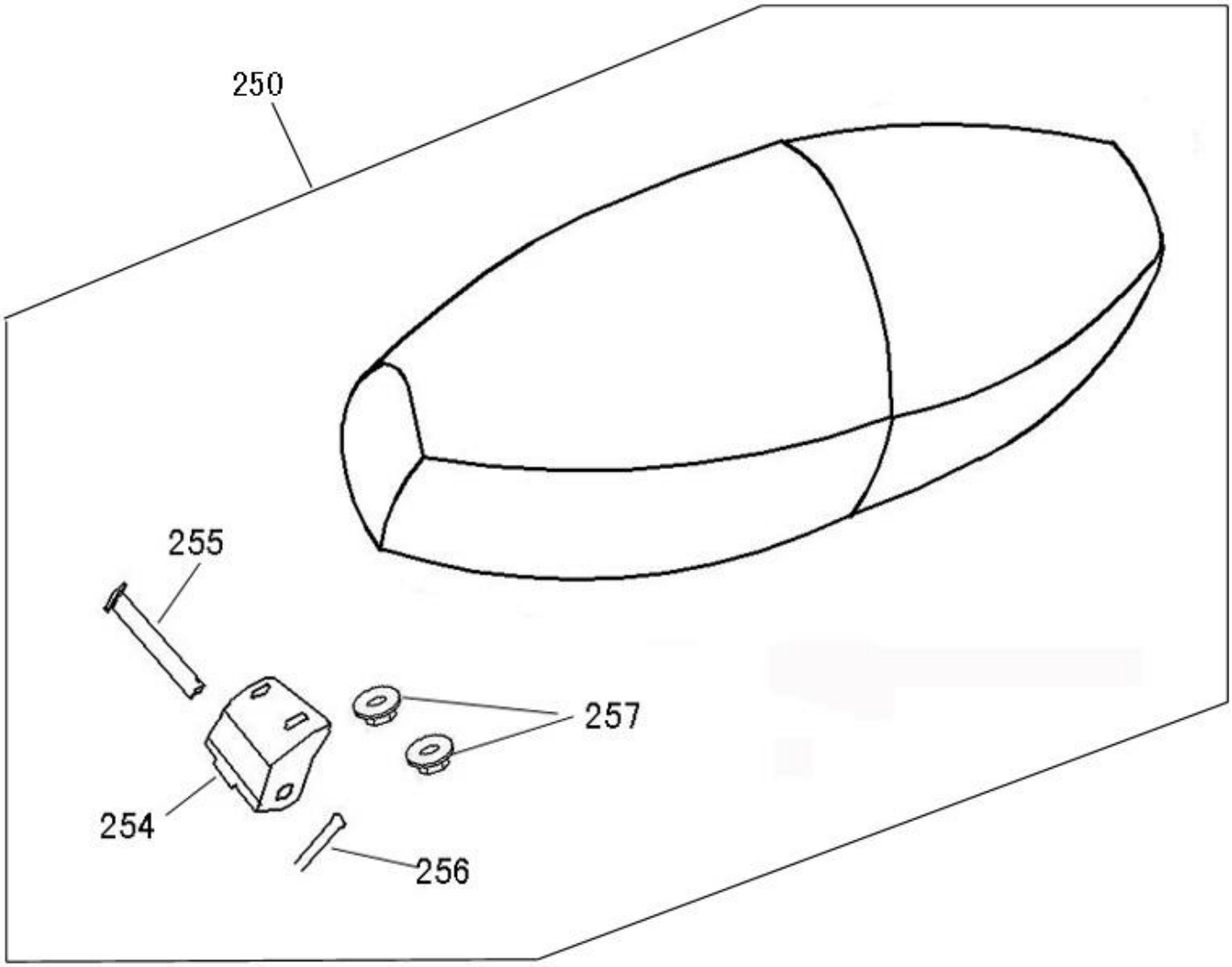

Diagram Number	Part Number (ZNEN, Vin starts with L5Y)	Part Number (JIAJUE, Vin starts with LLP)	Description
250	7720A-F35-9000	7720A-F35-9000-J	SEAT ASSY
Not Shown	77103-F35-9000	77103-F35-9000-J	BOLT LOCK PLATE SET
Not Shown	77206-F35-9000	77206-F35-9000-J	RUBBER SEAT CUSH
Not Shown	must buy assembly		RUBBER SEAL
254	77201-F35-9000	77201-F35-9000-J	HINGE SEAT
255	77202-F35-9000	77202-F35-9000-J	AXIS
256	77203-F35-9000	77203-F35-9000-J	SPLIT PIN
257	95101-06000-08	95101-06000-08-J	NUT FLANGE 6MM

Scorch 150cc (F35 150) #10

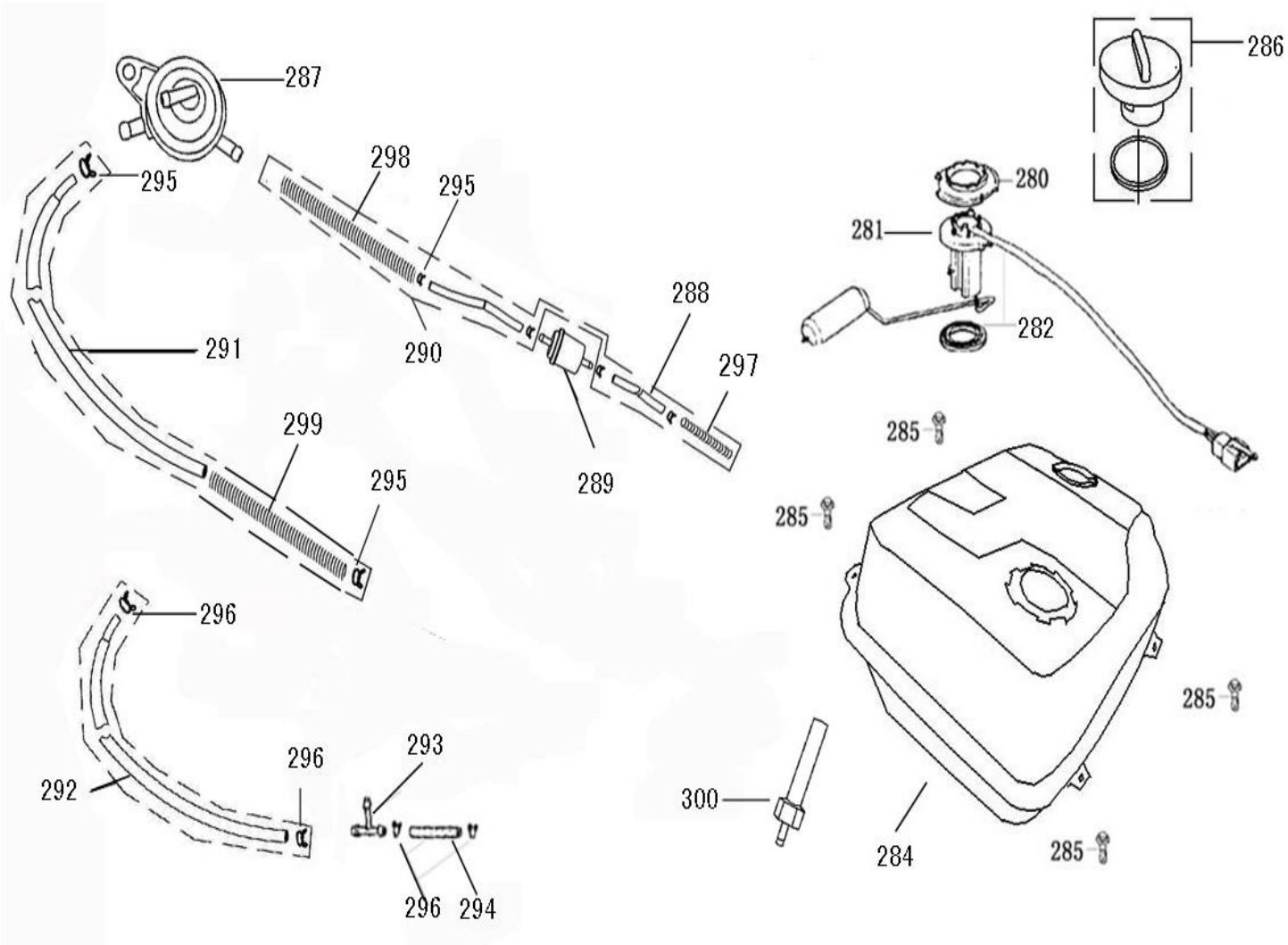

Diagram Number	Part Number (ZNEN, Vin starts with L5Y)	Part Number (JIAJUE, Vin starts with LLP)	Description
280	37802-F8-9000	37802-F8-9000-J	RET FUEL UNIT
281	3780A-LY-9000	3780A-LY-9000-J	FUEL UNIT
282	37801-F8-9000	37801-F8-9000-J	PACKING
284	17500-F22-9000	17500-F22-9000-J	TANK COMP FUEL
285	92101-06012-03	92101-06012-03-J	BOLT FLANGE 6*12 （G）
286	17620-F8-9000	17620-F8-9000-J	FUEL TANK CAP
287	16950-XF-9000	16950-XF-9000-J	SELF-SUCTION SWITCH
288	1768A-F22-9100	1768A-F22-9100-J	TUBE FUEL ASSY
289	16910-F8-9000	16910-F8-9000-J	STRAINER COMP FUEL
290	1768C-F22-9100	1768C-F22-9100-J	TUBE FUEL ASSY

Scorch 150cc (F35 150) #10 Cont'd

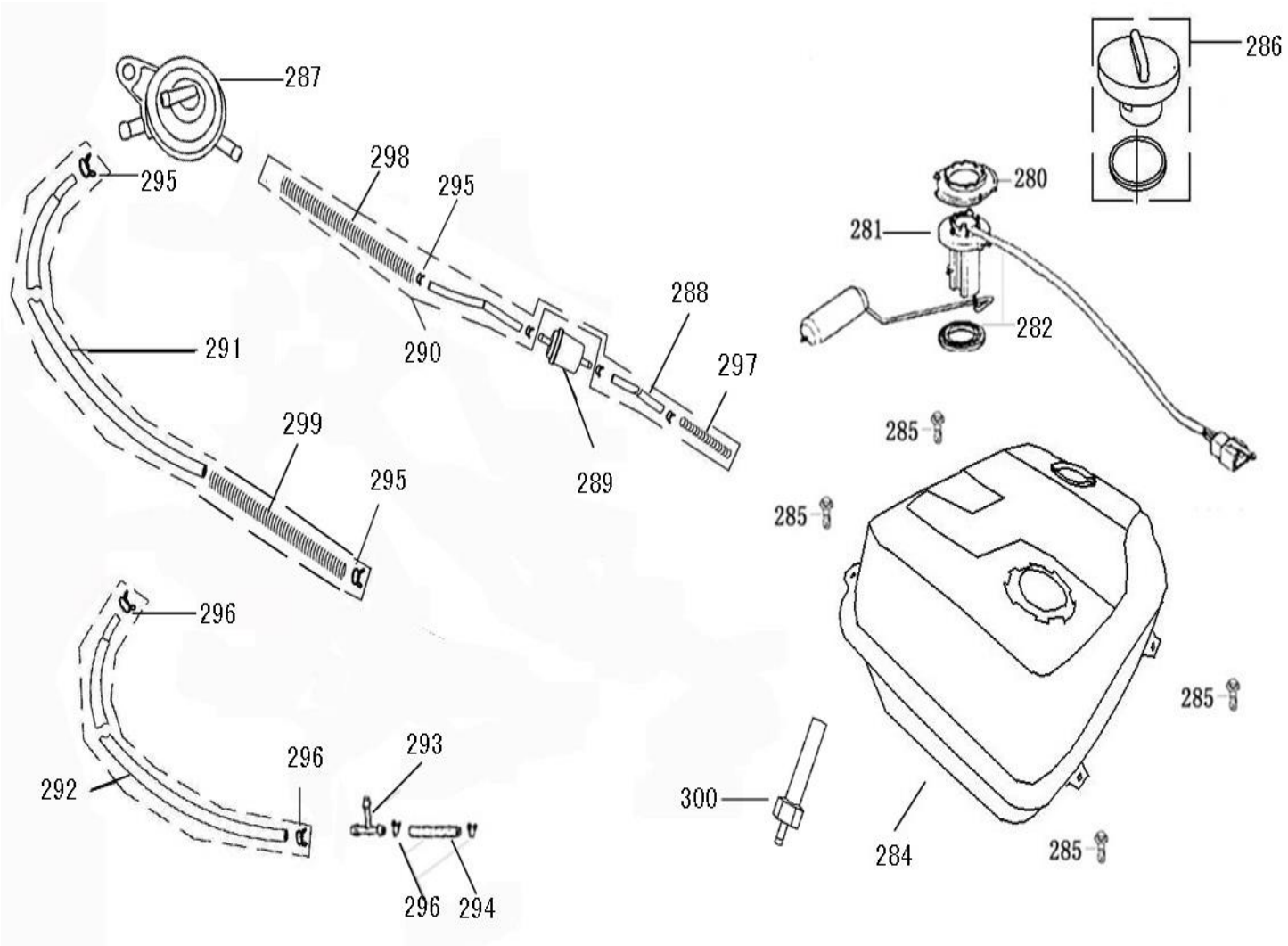

Diagram Number	Part Number (ZNEN, Vin starts with L5Y)	Part Number (JIAJUE, Vin starts with LLP)	Description
291	1768D-F22-9000	1768D-F22-9000-J	TUBE FUEL ASSY
292	1768B-F22-9000	1768B-F22-9000-J	TUBE ASSY VACUUM
293	38773-F8-9000	38773-F8-9000-J	JOINT 3 WAY 3.5
294	1768E-F22-9000	1768E-F22-9000-J	TUBE ASSY VACUUM
295	19411-F8-9000	19411-F8-9000-J	CLIP HOSE Φ8.5
296	19412-F8-9000	19412-F8-9000-J	CLIP HOSE Φ6.5
297	90016-F22-9000	90016-F22-9000-J	SPG FUEL TUBEI
298	90017-F22-9000	90017-F22-9000-J	SPG FUEL TUBEII
299	90018-F22-9000	90018-F22-9000-J	SPG FUEL TUBE III
300	17501-B08-9000	17501-B08-9000-J	CONNECTION MOUTH,OIL OUT

Scorch 150cc (F35 150) #11

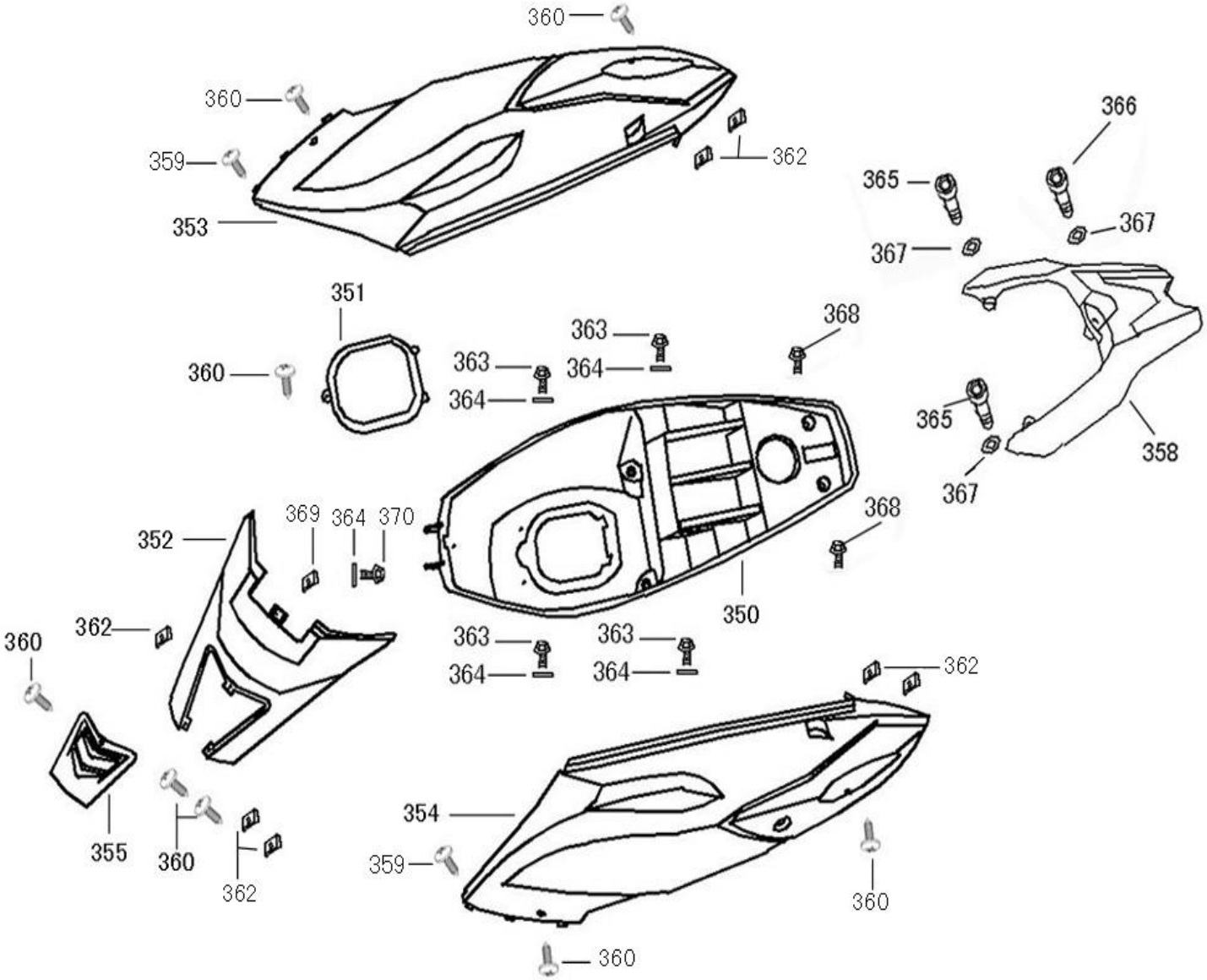

Diagram Number	Part Number (ZNEN, Vin starts with L5Y)	Part Number (JIAJUE, Vin starts with LLP)	Description
350	81250-F35-9000	81250-F35-9000-J	BOX LUGGAGE ASSY
351	81257-F22-9000	81257-F22-9000-J	COVER ASSY CARB MAINT
352	83750-F35-9000	83750-F35-9000-J	FR COVER LUGGAGE
353	83500-F35-9000	83500-F35-9000-J	COVER R BODY SIDE
354	83600-F35-9000	83600-F35-9000-J	COVER L BODY SIDE
355	83753-F35-9000	83753-F35-9000-J	LOOK-IN COVER
358	81200-F22-9000	81200-F22-9000-J	REAR CARRIER
359	93301-42012-03	93301-42012-03-J	SCREW TAPPING 4.2*12

Scorch 150cc (F35 150) #11 Cont'd

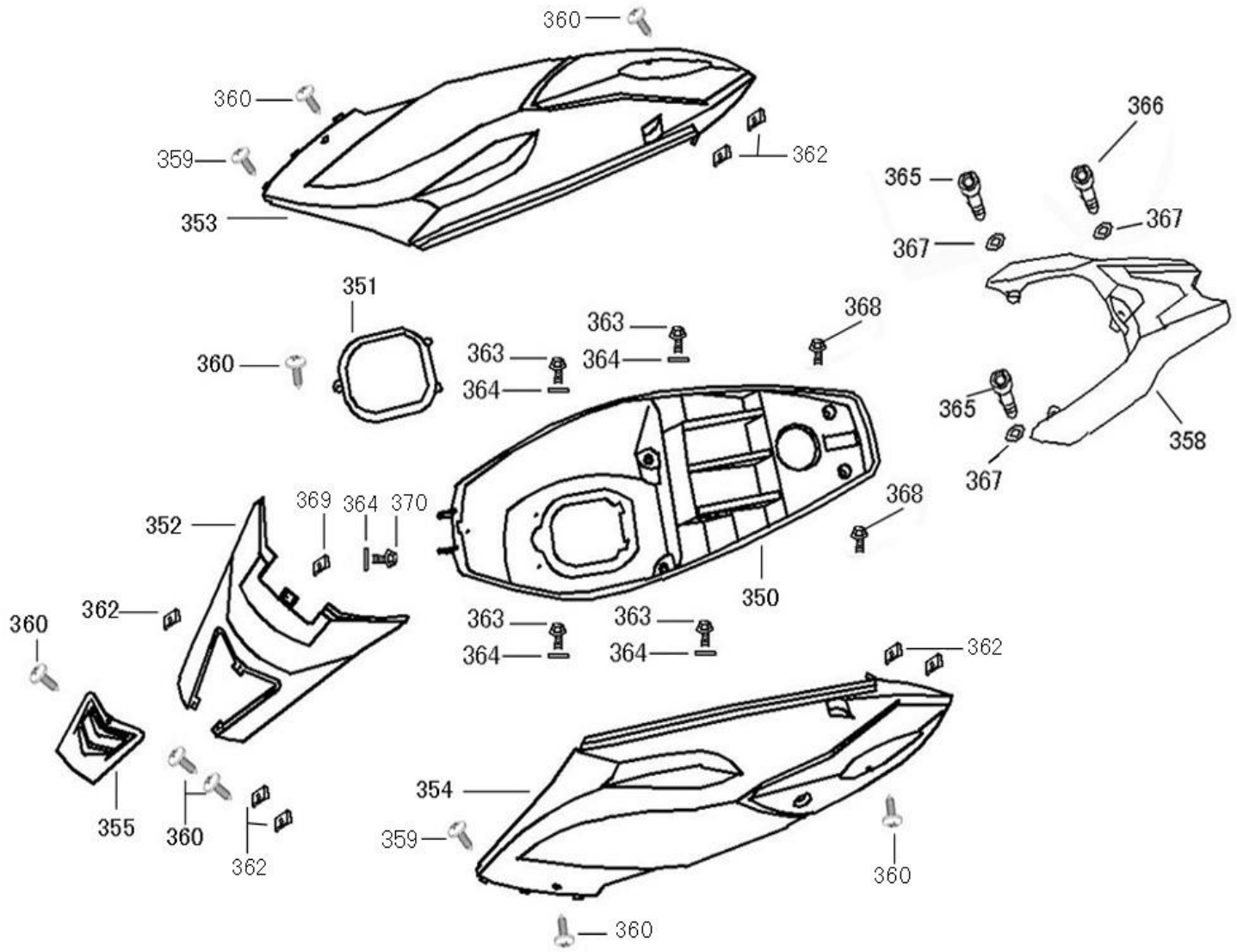

Diagram Number	Part Number (ZNEN, Vin starts with L5Y)	Part Number (JIAJUE, Vin starts with LLP)	Description
360	93301-48016-03	93301-48016-03-J	SCREW TAPPING 4.8*16
362	90601-F8-9000	90601-F8-9000-J	NUT SPRING 4MM
363	92101-06016-03	92101-06016-03-J	BOLT FLANGER 6*16
364	95801-06000-03	95801-06000-03-J	WASHER 6MM
365	92501-08025-03	92501-08025-03-J	BOLT SPECIAL 8*25
366	92501-08045-03	92501-08045-03-J	BOLT SPECIAL 8*45
367	95801-08000-03	95801-08000-03-J	WASHER 8MM
368	93003-06014-03	93003-06014-03-J	BOLT FLANGE 6*14（G）
369	90701-DGW-9000	90701-DGW-9000-J	NUT CLIP 6MM
370	92101-06020-03	92101-06020-03-J	BOLT FLANGER 6*20

Scorch 150cc (F35 150) #12

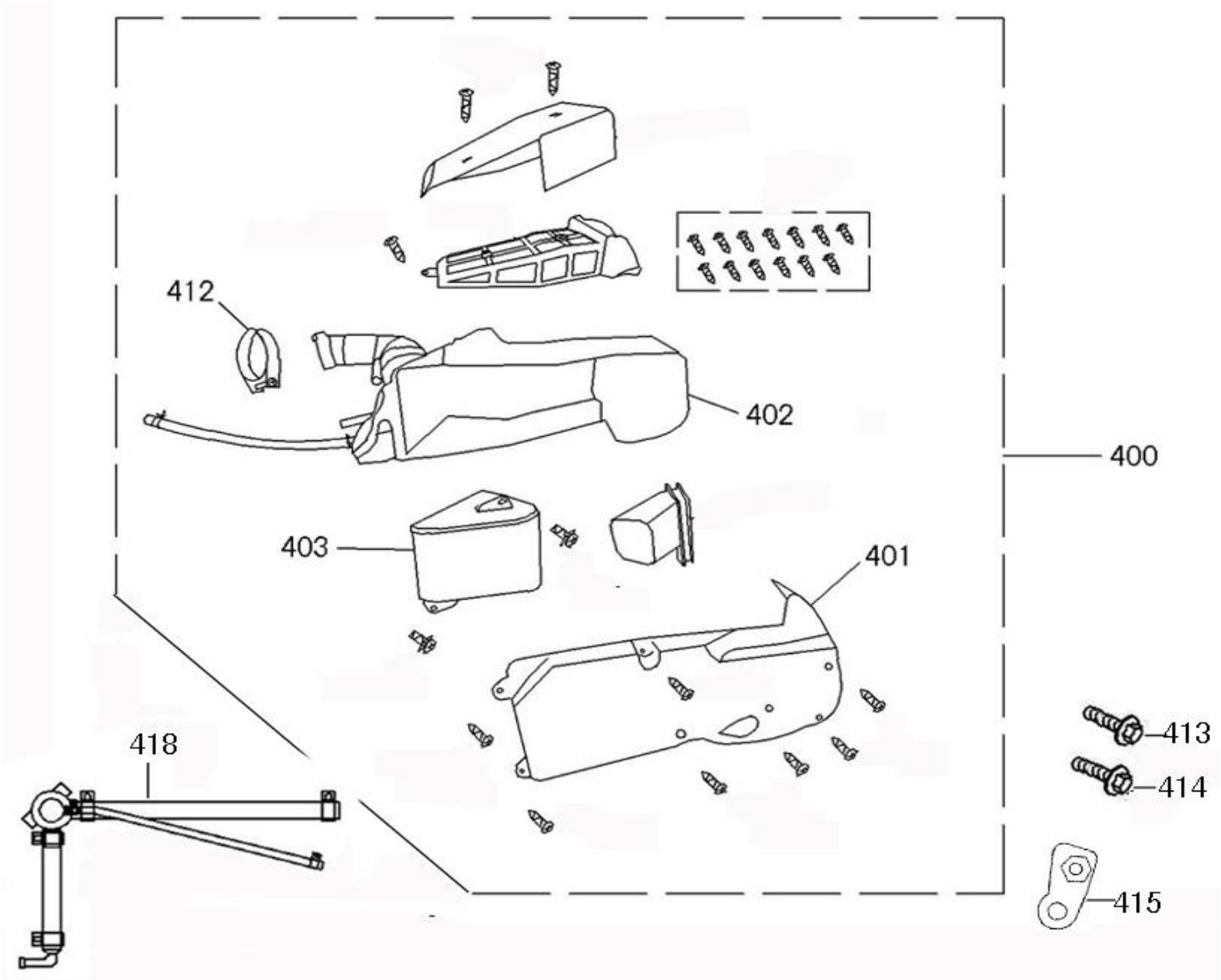

Diagram Number	Part Number (ZNEN, Vin starts with L5Y)	Part Number (JIAJUE, Vin starts with LLP)	Description
400	17200-B08-9000	17200-B08-9000-J	AIR/C ASSY
401	must buy assemby		COVER AIR/C
402	must buy assemby		CASE ASSY AIR/C
403	17211-B08-9000	17211-B08-9000-J	ELEMENT COMP AIR/C
412	90652-F8-9000	90652-F8-9000-J	BAND AIR/C CONNECTING TUBE
413	92101-06040-03	92101-06040-03-J	BOLT FLANGE SH 6*40(G)
414	92401-06025-03	92401-06025-03-J	BOLT FLANGE SH 6*25(G)
415	17219-B08-9000	17219-B08-9000-J	STAY AIR/C
418	1866A-F22-9000	1866A-F22-9000-J	DEADLINE AIR STRAINER

Scorch 150cc (F35 150) #13

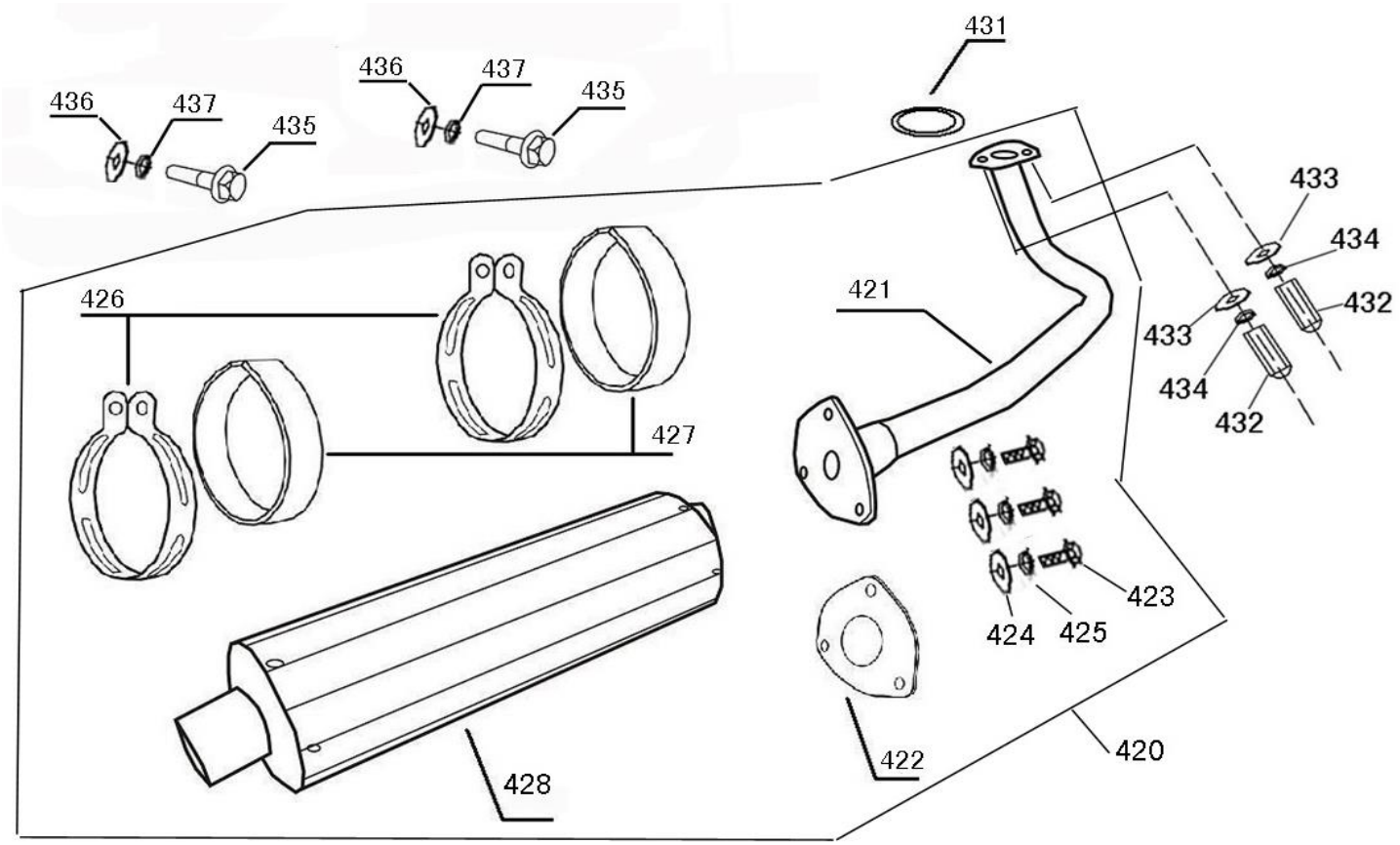

Diagram Number	Part Number (ZNEN, Vin starts with L5Y)	Part Number (JIAJUE, Vin starts with LLP)	Description
420	1830A-B08-E000	1830A-B08-E000-J	MUFFLER ASSY EXH
421	18310-B08-E000-A/B	18310-B08-E000-A/B-J	MUFFLER
422	18311-B08-9000-A/B	18311-B08-9000-A/B-J	VENT-PIPE HEAT INSULATION MAT
423	92201-08025-03	92201-08025-03-J	BOLT WASHER 8*25
424	95801-08000-03	95801-08000-03-J	WASHER 8MM
425	95901-08000-03	95901-08000-03-J	SPG WASHER 8MM
426	18312-B08-9000-A/B	18312-B08-9000-A/B-J	MUFFLER BLOCK HOOP
427	18313-B08-9000-A/B	18313-B08-9000-A/B-J	MUFFLER BLOCK HOOP RUBBER
428	sold as #420	Sold as #420	MUFFLER COMP EXH
431	18291-F8-9000	18291-F8-9000-J	GASKET EXH PIPE
432	90201-F8-9000	90201-F8-9000-J	NUT (HEX) CAP 6MM
433	95801-06000-03	95801-06000-03-J	WASHER 6MM
434	95901-06000-03	95901-06000-03-J	SPG WASHER 6MM
435	92201-10025-03	92201-10025-03-J	BOLT WASHER 10*25
436	95801-10000-03	95801-10000-03-J	WASHER 10MM
437	95901-10000-03	95901-10000-03-J	SPG WASHER 10MM

Scorch 150cc (F35 150) #14

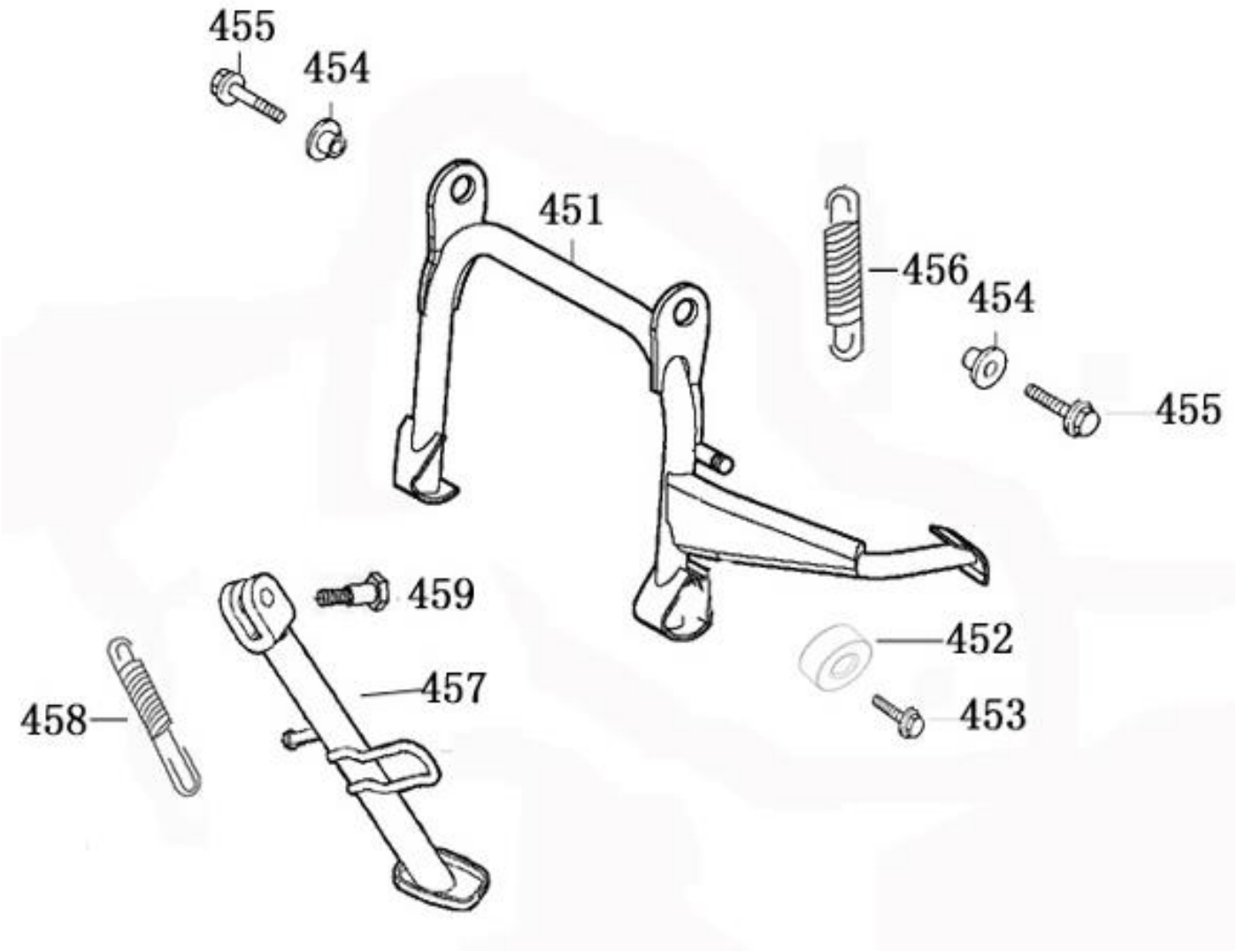

Diagram Number	Part Number (ZNEN, Vin starts with L5Y)	Part Number (JIAJUE, Vin starts with LLP)	Description
451	50500-F22-9000	50500-F22-9000-J	STAND COMP MAIN
452	50505-F8-9000	50505-F8-9000-J	STOPPER RUBBER
453	93002-06028-03	93002-06028-03-J	BOLT FLANGE 6*28（G）
454	50502-F8-9000	50502-F8-9000-J	COLLAR MAIN STAND
455	92201-10025-03	92201-10025-03-J	BOLT FLANGE 10*25 (G)
456	90014-B08-E000	90014-B08-E000-J	SPG D MAIN STAND
457	50530-F22-E000	50530-F22-E000-J	SIDE STAND COMP
458	90101-F8-E000	90101-F8-E000-J	SCREW SIDE STAND PIVOT
459	90015-PS-E000	90015-PS-E000-J	SPG B1 SIDE STAND

Scorch 150cc (F35 150) #15

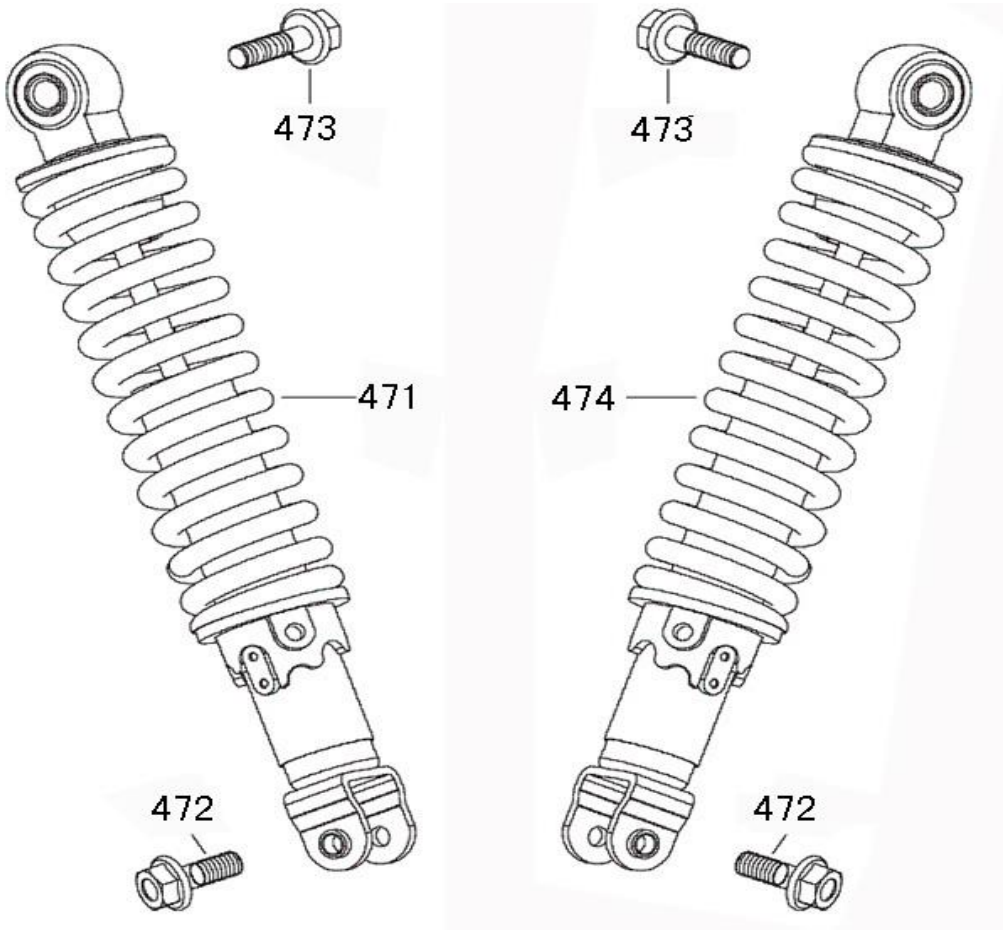

Diagram Number	Part Number (ZNEN, Vin starts with L5Y)	Part Number (JIAJUE, Vin starts with LLP)	Description
471	52500-B08-9000-A/B	52500-B08-9000-A/B-J	CUSHION ASSY RR L
472	92201-08032-03	92201-08032-03-J	BOLT FLANGE 8*32 (G)
473	92201-10040-03	92201-10040-03-J	BOLT FLANGE 10*40 (G)
474	52400-B08-9000-A/B	52400-B08-9000-A/B-J	CUSHION ASSY RR R

Scorch 150cc (F35 150) #16

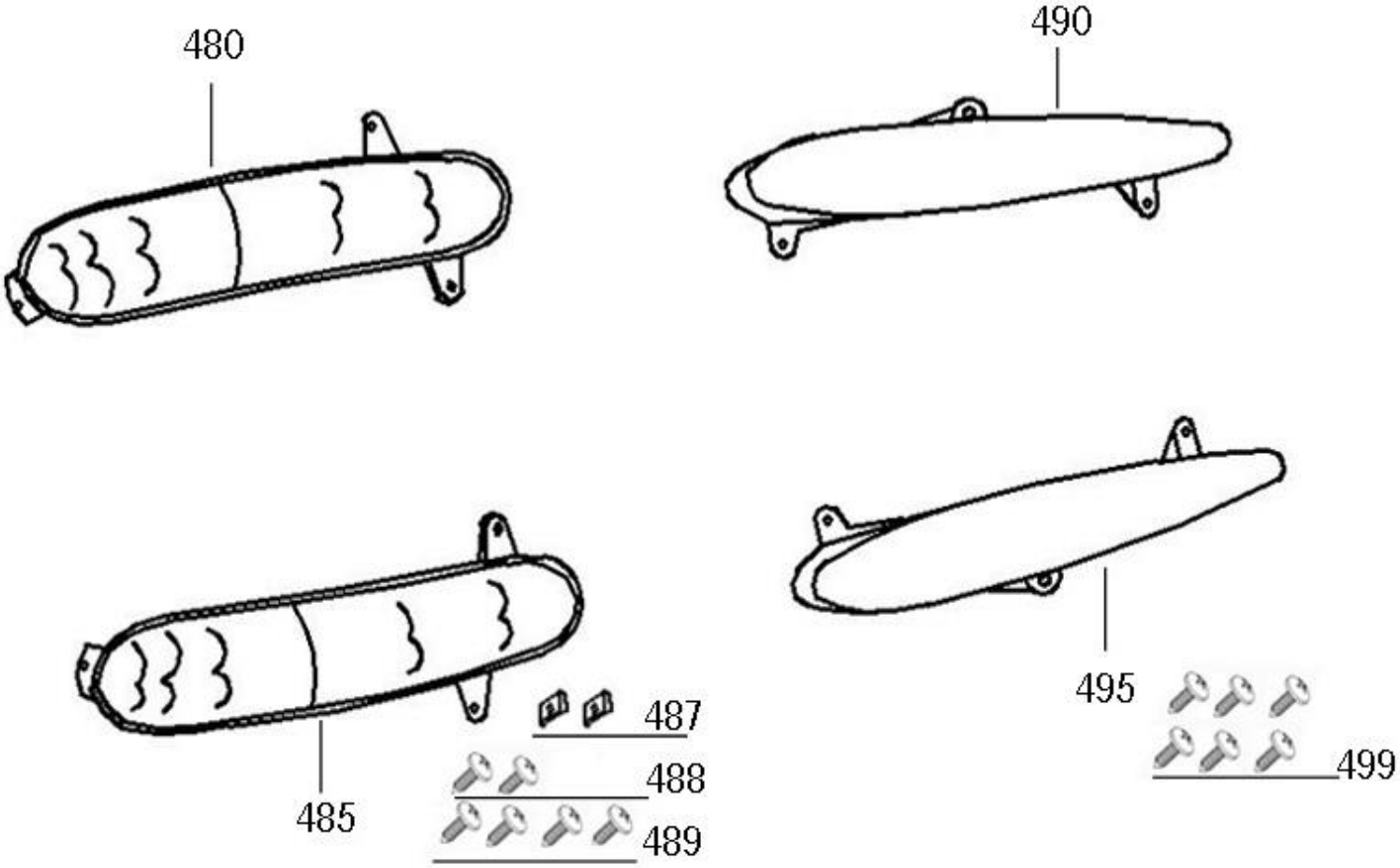

Diagram Number	Part Number (ZNEN, Vin starts with L5Y)	Part Number (JIAJUE, Vin starts with LLP)	Description
480	33400-F35-9000	33400-F35-9000-J	WINKER ASSY R FR
485	33450-F35-9000	33450-F35-9000-J	WINKER ASSY L FR
487	90601-F8-9000	90601-F8-9000-J	NUT SPRING 4MM
488	93401-48012-03	93401-48012-03-J	SCREW TAPPING 4.8*12（G）
489	93401-42012-03	93401-42012-03-J	SCREW TAPPING 4.2*12（G）
490	33600-F35-9000	33600-F35-9000-J	WINKER ASSY R RR
495	33650-F35-9000	33650-F35-9000-J	WINKER ASSY L RR
499	93401-42012-03	93401-42012-03-J	SCREW TAPPING 4.2*12（G）

Scorch 150cc (F35 150) #17

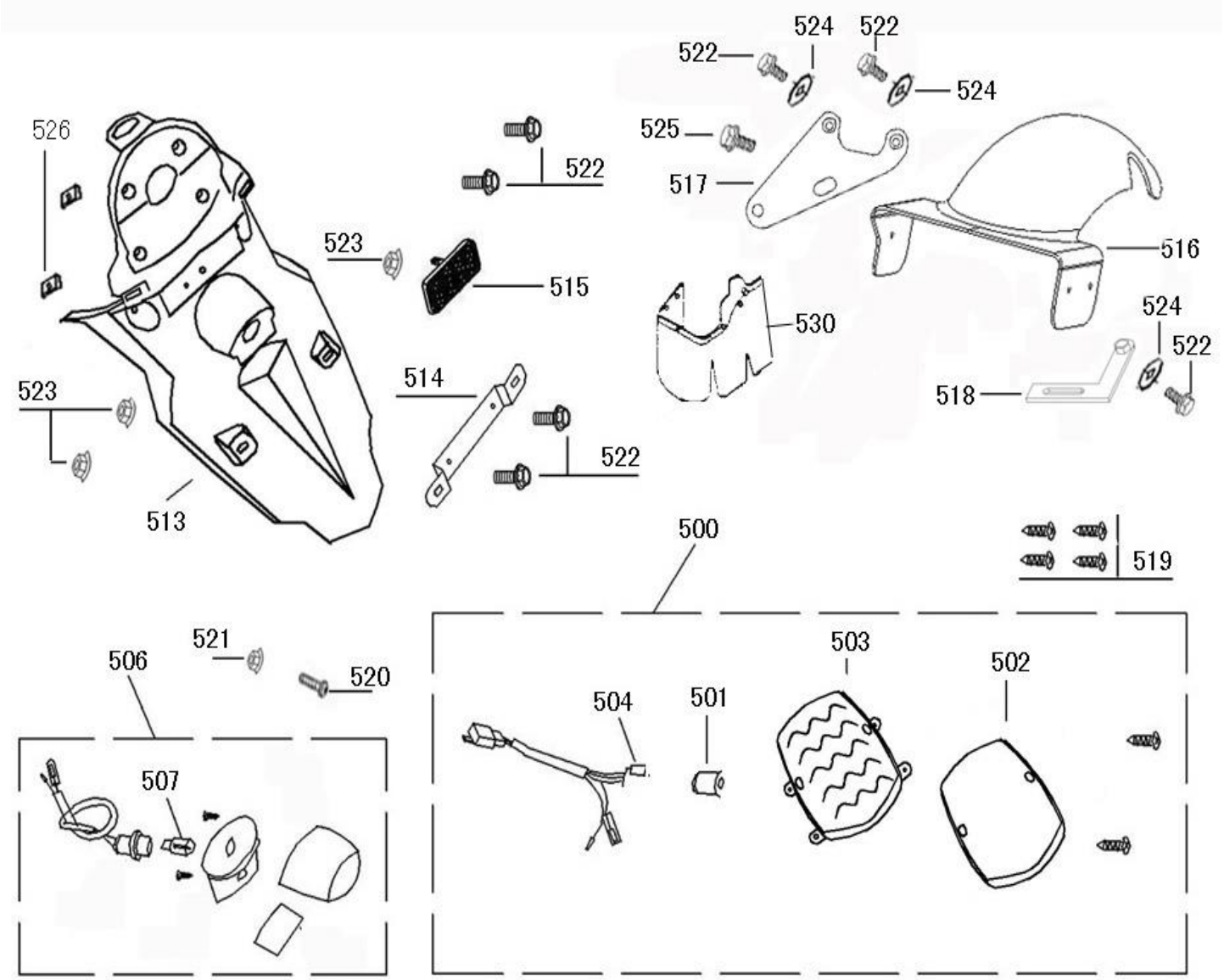

Diagram Number	Part Number (ZNEN, Vin starts with L5Y)	Part Number (JIAJUE, Vin starts with LLP)	Description
500	33700-F35-9000	33700-F35-9000-J	LIGHT ASSY RR COMB
501	34960-F35-9000	34960-F35-9000-J	BULB TAIL LIGHT
502	Must buy #500	must buy #500	LENS COMP TAIL LIGHT
503	Must buy #500	must buy #500	BASE COMP RR COMB
504	Must buy #500	must buy #500	SOCKET COMP RR COMB
506	33720-F22-9000	33720-F22-9000-J	LIGHT ASSY. LICENSE
507	34903-F8-9000	34903-F8-9000-J	BULB 12V 5W
513	80105-F35-9000	80105-F35-9000-J	FENDER RR

Scorch 150cc (F35 150) #17 Cont'd

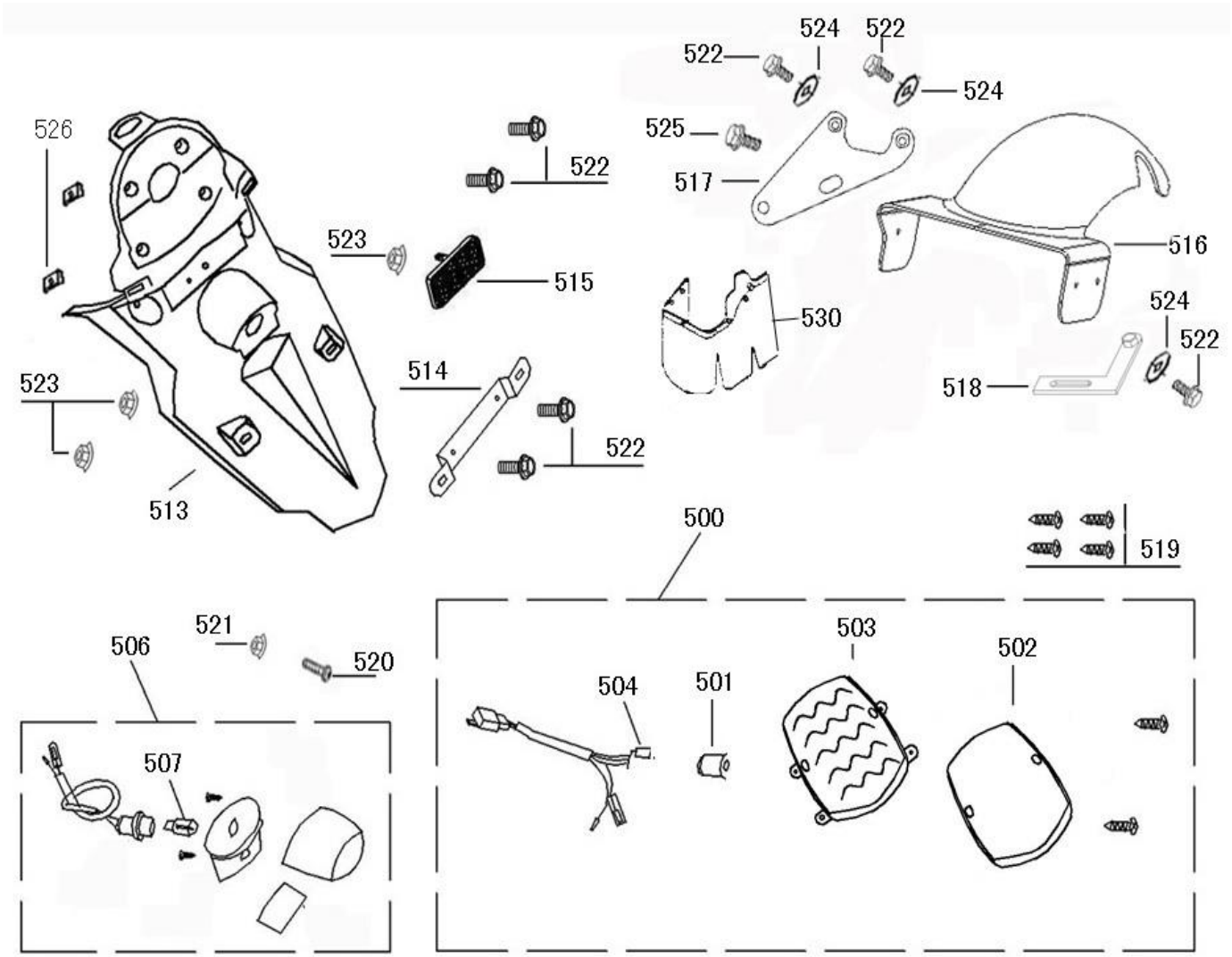

514	84707-B08-9000-A/B	84707-B08-9000-A/B-J	UNDER NUMBER BRKT RR
515	33751-F8-E000	33751-F8-E000-J	REFLEX REFLECTOR RR
516	80102-B08-9000-A/B	80102-B08-9000-A/B-J	FENDER RR TIRE
517	80110-B08-9000	80110-B08-9000-J	STAY FENDER RR TIRE
518	80109-B08-9000	80109-B08-9000-J	STAY FENDER RR TIRE
519	93401-48016-03	93401-48016-03-J	SCREW TAPPING 4.8*16（G）
520	93201-05016-03	93201-05016-03-J	SCREW SPECIAL 5*16
521	95101-05000-03	95101-05000-03-J	NUT FLANGE 5MM（G）
522	92101-06016-03	92101-06016-03-J	BOLT FLANGE 6*16 (G)
523	95201-06000-03	95201-06000-03-J	NUT FLANGE 6MM
524	95801-06000-03	95801-06000-03-J	WASHER 6MM
525	92201-08016-03	92201-08016-03-J	BOLT FLANGE 8*16 (G)
526	90601-F8-9000	90601-F8-9000-J	NUT SPRING 4MM
530	80106-B08-9000	80106-B08-9000-J	PLATE SPLASH GUARD

Scorch 150cc (F35 150) #18

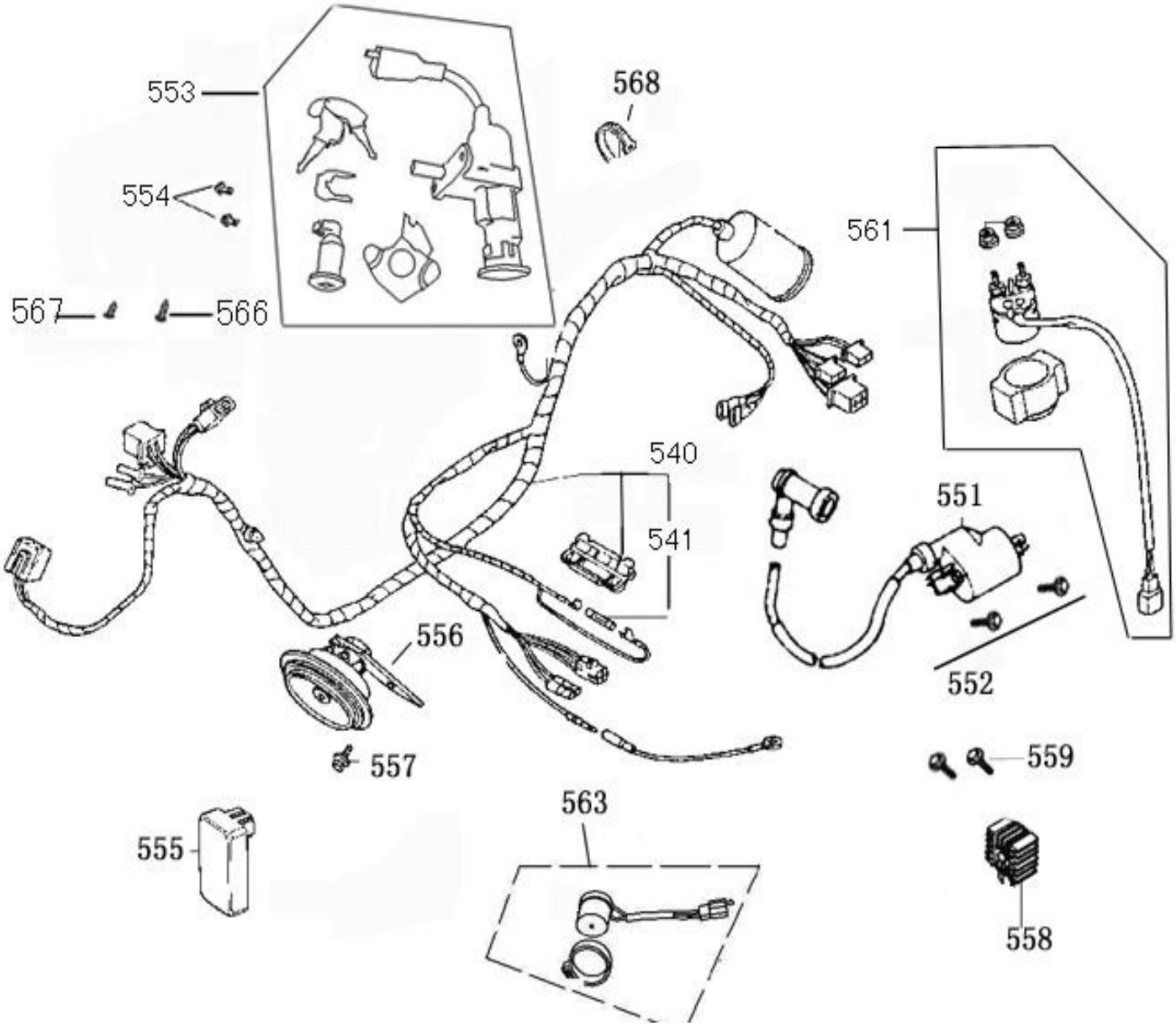

Diagram Number	Part Number (ZNEN, Vin starts with L5Y)	Part Number (JIAJUE, Vin starts with LLP)	Description
540	32100-F35-E000	32100-F35-E000-J	HARNESS WIRE
Not Shown	38205-XF-9000	38205-XF-9000-J	CASE FUSE
541	99200-11500	99200-11500-J	FUSE 15A
551	3051A-XF-9000	3051A-XF-9000-J	COIL ASSY IGN
552	92101-06016-03	92101-06016-03-J	BOLT FLANGER 6*16 （G）
553	35010-F22-9000-A/B	35010-F22-9000-A/B-J	SW COMP LOCK
554	92101-06016-03	92101-06016-03-J	BOLT FLANGE 6*16 （G）
555	30400-AEA1-0000	30400-AEA1-0000-J	UNIT COMP CDI

Scorch 150cc (F35 150) #18 Cont'd

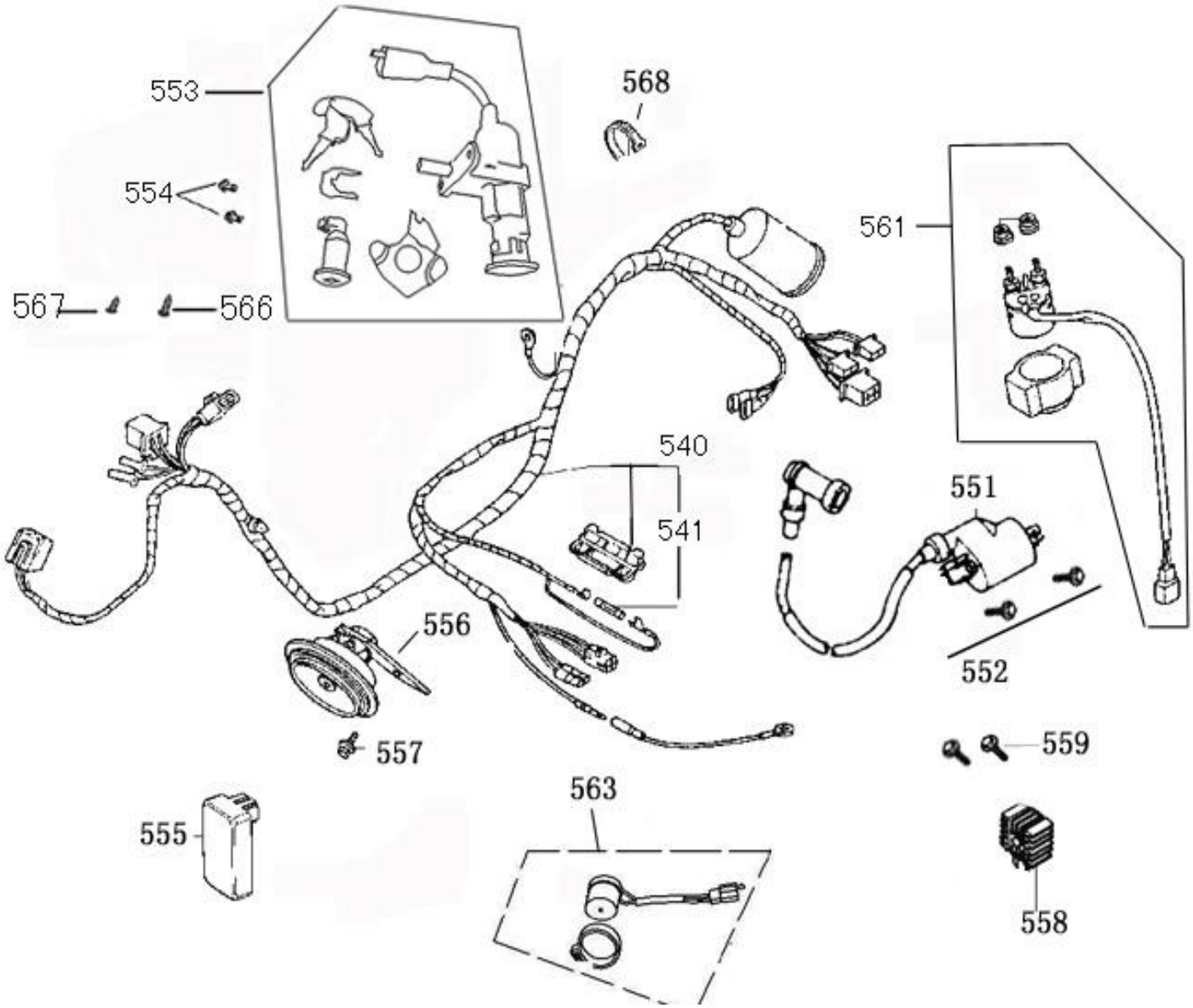

Diagram Number	Part Number (ZNEN, Vin starts with L5Y)	Part Number (JIAJUE, Vin starts with LLP)	Description
556	38110-XF-9000	38110-XF-9000-J	HORN COMP (HIGH)
557	92101-06012-03	92101-06012-03-J	BOLT FLANGE 6*12 （G）
558	31600-F8-9000	31600-F8-9000-J	REG REC COMP
559	92101-06016-03	92101-06016-03-J	BOLT FLANGE 6*16 （G）
561	35850-XF-9000-A/B	35850-XF-9000-A/B-J	SET START MAG ASSY
Not Shown	95101-06000-08	95101-06000-08-J	NUT FLANGE 6MM (C)
563	38300-XF-9000	38300-XF-9000-J	RELAY ASSY WINKER
566	93401-38013-03	93401-38013-03-J	SCREW TAPPING 3.8*13
567	93401-38005-03	93401-38005-03-J	SCREW TAPPING3.8*5
568	90006-F8-9000	90006-F8-9000-J	BAND OIL HOSE 250MM

Scorch 150cc (F35 150) #19

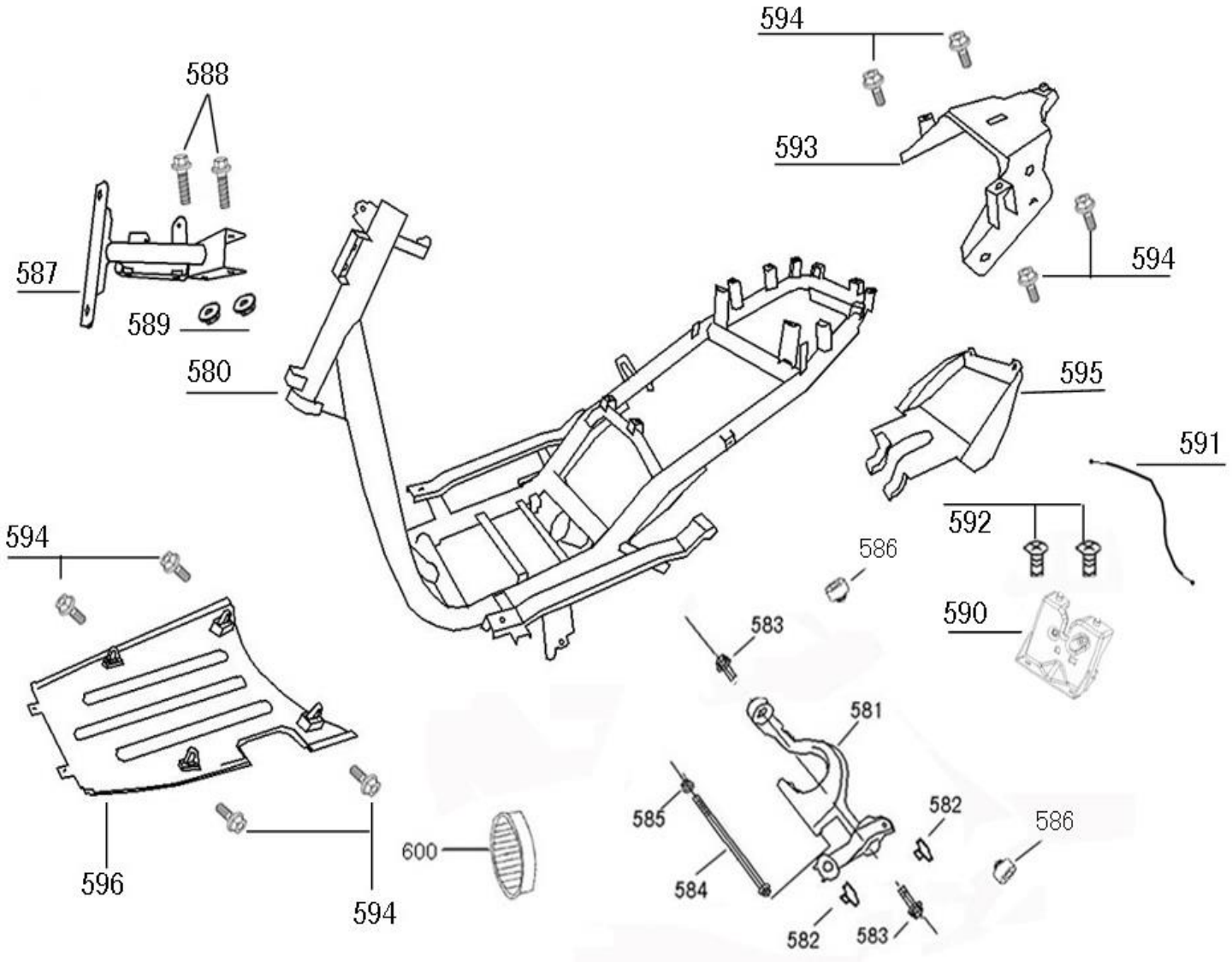

Diagram Number	Part Number (ZNEN, Vin starts with L5Y)	Part Number (JIAJUE, Vin starts with LLP)	Description
580	50100-F35-9000	50100-F35-9000-J	BODY COMP FRAME
581	50350-F22-9000	50350-F22-9000-J	ENG HANGER ASSY
582	50352-F8-9000	50352-F8-9000-J	RUBBER STOPPER
583	92201-10055-03	92201-10055-03-J	BOLT FLANGE 10*55
584	50356-F8-9000	50356-F8-9000-J	BOLT ENG HANGER 10*185
585	95401-10000-03	95401-10000-03-J	NUT U FLANGE 10MM(G)
586	50354-F8-9000	50354-F8-9000-J	CAP ENG HANGER
587	38101-F35-9000	38101-F35-9000-J	STAY,HORN
588	92101-06055-03	92101-06055-03-J	BOLT FLANGE 6*55

Scorch 150cc (F35 150) #19 Cont'd

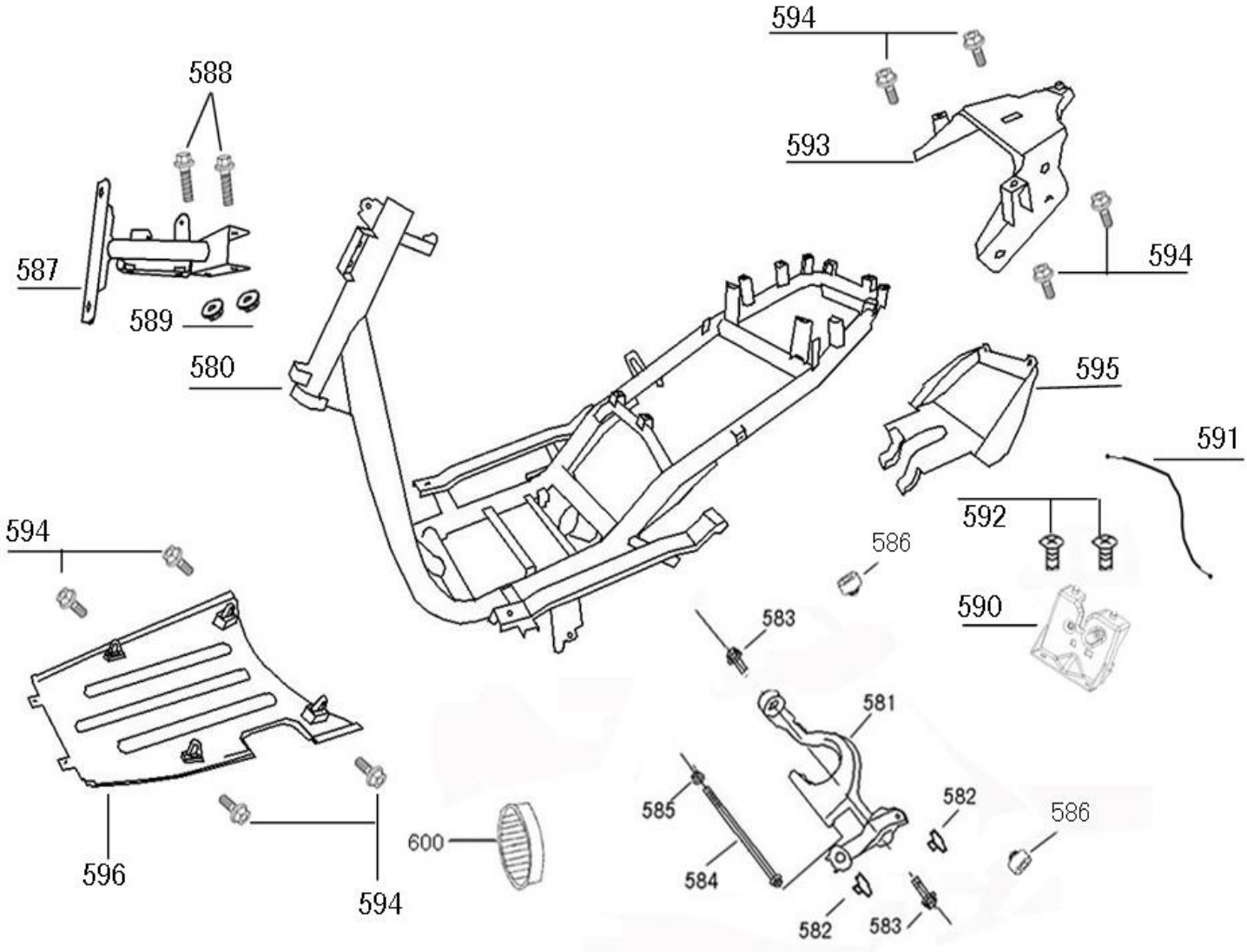

Diagram Number	Part Number (ZNEN, Vin starts with L5Y)	Part Number (JIAJUE, Vin starts with LLP)	Description
589	95201-06000-03	95201-06000-03-J	NUT FLANGE 6MM
590	77235-F35-9000	77235-F35-9000-J	SEAT CATCH COMP
591	77240-F22-9000	77240-F22-9000-J	CABLE SEAT LOCK
592	92701-06016-03	92701-06016-03-J	SCREW SPECIAL 6*16
593	17551-F22-9000	17551-F22-9000-J	PLATE FUEL GUIDE
594	92101-06016-03	92101-06016-03-J	BOLT FLANGE 6*16
595	17552-F22-9000	17552-F22-9000-J	COVER UNDER FUEL
596	50613-F22-9000	50613-F22-9000-J	COVER UNDER
600	11345-F8-9000	11345-F8-9000-J	DUCT L COVER